CG-273-74

VOLUME 3

1716

TECHNICAL MANUAL

for

LORAN TRANSMITTING SET AN/FPN-42

TECHNICAL MANUAL FOR
HIGH VOLTAGE POWER
SUPPLY PP2540/FPN–42

SPERRY GYROSCOPE COMPANY
DIVISION OF SPERRY RAND CORPORATION
GREAT NECK, NEW YORK

TREASURY DEPARTMENT
U. S. COAST GUARD

CG-273-74 VOLUME 3

TECHNICAL MANUAL

for

LORAN TRANSMITTING SET AN/FPN-42

TECHNICAL MANUAL FOR
HIGH VOLTAGE POWER
SUPPLY PP2540/FPN–42

SPERRY GYROSCOPE COMPANY
DIVISION OF SPERRY RAND CORPORATION
GREAT NECK, NEW YORK

TREASURY DEPARTMENT
U. S. COAST GUARD

Contract: Tcg 41012

Approved by the Commandant
USCG: 16 March 1962

LIST OF EFFECTIVE PAGES

PAGE NUMBERS	CHANGE IN EFFECT	PAGE NUMBERS	CHANGE IN EFFECT
Title Page	Original	4-0 to 4-36	Original
ii to viii	Original	5-1 to 5-18	Original
1-0 to 1-5	Original	6-1 to 6-50	Original
2-0 to 2-4	Original	7-1 to 7-28	Original
3-1 to 3-27	Original		

TABLE OF CONTENTS

SECTION 1 - GENERAL INFORMATION

Paragraph		Page
1-1.	Introduction	1-1
1-2.	Functional Description	1-1
1-3.	Factory or Field Changes	1-1
1-4.	Quick Reference Data	1-2
	a. Power Requirements	1-2
	b. Available Outputs	1-2
	c. Ambient Temperature Range	1-3
1-5.	Requirement Lists	1-3
	a. Equipment Supplied	1-3
	b. Equipment and Publications Required but not Supplied	1-4
	c. Shipping Data	1-4
1-6.	Electron Tube Complement	1-4
1-7.	Semiconductor Device Complement	1-5

SECTION 2 - INSTALLATION

2-1.	Unpacking and Handling	2-0
2-2.	Installation	2-0
	a. Procedure	2-0
	b. Layout	2-0
	c. Interconnection	2-0
2-3.	Adjustments	2-0

SECTION 3 - OPERATOR'S SECTION

3-1.	General	3-1
3-2.	Functional Operation	3-1
	a. General	3-1
3-3.	Operating Procedures	3-1
3-4.	Operating Controls	3-1
3-5.	Operation	3-1
	a. General	3-1

SECTION 4 - PRINCIPLES OF OPERATION

4-1.	Overhaul Functional Description	4-0
4-2.	General	4-0
4-3.	Block Diagram Analysis	4-0
4-4.	Detailed Circuit Analysis	4-3
4-5.	Stop, Start, and Air Cooling Circuits	4-3
	a. General	4-3
	b. Circuit Analysis	4-3

SECTION 4 - PRINCIPLES OF OPERATION (Continued)

Paragraph		Page
4-6.	Voltage Regulators Z1 and Z2	4-4
	a. General Description	4-4
	b. Block Diagram	4-8
	c. Circuit Analysis of Voltage Regulator Z1	4-8
	d. Circuit Analysis of Voltage Regulator Z2	4-13
	e. Automatic Voltage Regulation of Voltage Regulators Z1 and Z2	4-13
4-7.	Control Circuits	4-19
	a. General	4-19
	b. Circuit Analysis	4-19
4-8.	Bias Voltage Output Circuits	4-23
	a. General	4-23
	b. Circuit Analysis	4-23
4-9.	High-Voltage Rectifier Circuit	4-29
	a. General	4-29
	b. Circuit Analysis	4-29
4-10.	Plate Circuit Breaker CB1	4-35
	a. General	4-35
	b. Operation	4-35

SECTION 5 - TROUBLE-SHOOTING

5-1.	General	5-1
5-2.	Test Equipment and Special Tools	5-1
5-3.	Overall Trouble-Shooting	5-1
5-4.	Stop, Start, and Air Cooling Circuits, Trouble-Shooting	5-1
5-5.	Voltage Regulator Z1, Trouble-Shooting	5-1
5-6.	Voltage Regulator Z2, Trouble-Shooting	5-1
5-7.	Control Circuits, Trouble-Shooting	5-6
5-8.	Bias Voltage Circuits, Trouble-Shooting	5-6
5-9.	High-Voltage Circuits, Trouble-Shooting	5-13
5-10.	Voltage and Resistance Diagram	5-15
5-11.	Typical Troubles	5-17

TABLE OF CONTENTS (Continued)

SECTION 5 - TROUBLE-SHOOTING (Continued)

Paragraph Page

5-12. Location of Parts 5-17

SECTION 6 - SERVICE AND REPAIR

6-1. Failure Report 6-1
6-2. Preventive Maintenance ... 6-1
a. Air Filter 6-1
b. Transformer T1 6-1
c. Voltage Regulators Z1 and Z2 6-2
6-3. Performance Standards 6-2
6-4. Repair 6-2
6-5. Adjustment Procedures 6-2
a. Test Equipment and Special Tools 6-2
b. Low-Voltage Alarm Adjustment 6-2
c. Bias Voltage Loss Adjustment 6-2
d. Overload Relay Adjustments..... 6-2
6-6. Voltage Regulator Adjustments 6-6
a. Voltage Regulator Z1K1 and Z2K2 6-6
6-7. Removal of Parts and Sub-Assemblies 6-11
a. General 6-11
b. Special Procedures 6-12
6-8. Disassembly and Repair ... 6-14
6-9. Voltage Regulator Relay Repair 6-15
a. Removal of Stationary Contacts from Regulator Relay 6-15

SECTION 6 - SERVICE AND REPAIR (Continued)

Paragraph Page

b. Cleaning Contacts 6-15
c. Assembly of Contacts .. 6-17
d. Sluggish Operation 6-19
e. Front Pivot-Bearing Assembly 6-20
f. Assembly of Contact Beam 6-20
g. Testing Regulator Relay Coils 6-22
6-10. Motor Control Relay Repair 6-22
a. Inspection 6-22
b. Maintenance 6-24
c. Tests 6-25
d. Replacement of Contacts 6-25
e. Replacement of Coils .. 6-26
f. Testing Coils 6-27
6-11. Repair of Relays K27 through K34 6-27
6-12. Variable Transformers T7 and T8, Brush Replacement 6-27
6-13. Variable Transformer T9, Brush Replacement 6-28
6-14. Circuit Breaker CB1, Motor Operator Replacement 6-28
6-15. General Repair 6-29
6-16. Overall Schematic Diagram 6-29

SECTION 7 - PARTS LIST

7-1. Introduction 7-1
7-2. Maintenance Parts List ... 7-1
7-3. List of Manufacturers 7-1

LIST OF ILLUSTRATIONS

SECTION 1 - GENERAL INFORMATION

Figure Page

1-1. Power Supply PP-2540/FPN-42 1-0

SECTION 2 - INSTALLATION

2-1. Installation Diagram 2-1
2-2. Interconnection Diagram .. 2-3

SECTION 3 - OPERATOR'S SECTION

3-1. Front Panel Controls and Indicators, Center Cabinet Section (Serial No's 1-16), Front View 3-3

SECTION 4 - PRINCIPLES OF OPERATION

4-1. Simplified Overall Functional Block Diagram 4-1
4-2. Stop, Start, and Air Cooling Circuits, Block Diagram 4-5
4-3. Stop, Start, and Air Cooling Circuits, Schematic Diagram 4-7
4-4. Voltage Regulators Z1 and Z2, Block Diagram 4-9
4-5. Voltage Regulator Z1, Schematic Diagram 4-11
4-6. Voltage Regulator Z2, Schematic Diagram 4-15
4-7. Voltage Regulator Relay, Sectional View 4-17
4-8. Control Circuits, Schematic Diagram 4-21
4-9. Bias Voltage Output Circuits, Block Diagram 4-25
4-10. Bias Voltage Output Circuits, Schematic Diagram . 4-27
4-11. High-Voltage Output Circuits, Block Diagram 4-31
4-12. High-Voltage Rectifier Circuits, Schematic Diagram 4-33

SECTION 5 - TROUBLE-SHOOTING

5-1. Circuit Breaker CB1 (Serial No's 1-16)..... 5-6

SECTION 5 - TROUBLE-SHOOTING (Continued)

Figure Page

5-2. Silicon Diode Assembly SD1, Parts Identification. 5-13
5-3. Resistance Measurements .. 5-16

SECTION 6 - SERVICE AND REPAIR

6-1. Control Panel, Left Cabinet Section, Left Side Interior View 6-3
6-2. Control Panel, Right Cabinet Section, Right Side Interior View 6-4
6-3. Typical Overload Relay, Adjustments and Parts Identification 6-5
6-4. Voltage Regulator Relay .. 6-7
6-5. Voltage Regulator Relay, Contact Alignment 6-7
6-6. Left Cabinet Section, Front View, Front Panel Removed 6-8
6-7. Left Cabinet Section, Right Side View 6-10
6-8. Components of Voltage Regulator Z1, Left Cabinet Section, Interior View ... 6-11
6-9. Center Cabinet Section, Left Side View 6-13
6-10. Components of Voltage Regulator Z2 6-14
6-11. Bottom Portion of Center Cabinet Section, Right Side View 6-15
6-12. Control Panel, Center Cabinet Section, Rear Interior View 6-16
6-13. Variations in Fuse Mountings 6-17
6-14. Right Cabinet Section (Serial No's 1-16), Left Side View 6-18
6-15. Removal of Stationary Contacts 6-19
6-16. Contact Beam Assembly 6-21
6-17. Front Pivot-Bearing Adjustment 6-21
6-18. Motor Control Relay, Rear View 6-22
6-19. Motor Control Relay, Sectional View 6-23

LIST OF ILLUSTRATIONS (Continued)

SECTION 6 - SERVICE AND REPAIR (Continued)

Figure		Page
6-20.	Motor Control Relay, Contact Assembly	6-25
6-21.	Motor Control Relay, Rear View, Wiring Diagram	6-26
6-22.	Variable Transformers T7, T8, and T9, Brush Locations	6-27
6-23.	Plate Relay K27	6-28
6-24.	Bias Relay K34	6-29
6-25.	Full Filament Relay K33	6-30
6-26.	Initial Filament Relay K32	6-31
6-27.	Power Supply PP-2540/FPN-42, Overall Schematic Diagram (Sheet 1 of 2)	6-33

SECTION 6 - SERVICE AND REPAIR (Continued)

Figure		Page
6-27.	Power Supply PP-2540/FPN-42, Overall Schematic Diagram (Sheet 2 of 2)	6-35
6-28.	Center Cabinet Front Panel, Wiring Diagram	6-43
6-29.	Center Cabinet Rear Panel, Wiring Diagram	6-45
6-30.	Right Cabinet Control Panel, Wiring Diagram	6-47
6-31.	Right Cabinet Control Panel, Rear, Wiring Diagram	6-49
6-32.	Circuit Breaker CB1, Interconnection Diagram	6-50

LIST OF TABLES

SECTION 1 - GENERAL INFORMATION

Table		Page
1-1.	Field Changes	1-1
1-2.	Available Outputs	1-3
1-3.	Power Supply PP-2540/FPN-42, Equipment Supplied	1-3
1-4.	Power Supply PP-2540/FPN-42, Equipment and Publications Required but not Supplied	1-4
1-5.	Shipping Data	1-5

SECTION 3 - OPERATOR'S SECTION

3-1.	Operating Controls, Power Supply PP-2540/FPN-42	3-4
3-2.	Sequence of Manual Operation	3-11
3-3.	Sequence of Automatic Operation	3-20
3-4.	Corrective Procedures for Abnormal Indications	3-26

SECTION 4 - PRINCIPLES OF OPERATION

Table		Page
4-1.	Operating Conditions of Rectifier Tubes V1 through V12 at Time T_o	4-30

SECTION 5 - TROUBLE-SHOOTING

5-1.	Power Supply PP-2540/FPN-42, Stop, Start, and Air Cooling Circuits, Functional Section Trouble-Shooting Chart	5-2
5-2.	Power Supply PP-2540/FPN-42, Voltage Regulator Z1, Functional Section Trouble-Shooting Chart	5-3
5-3.	Power Supply PP-2540/FPN-42, Voltage Regulator Z2, Functional Section Trouble-Shooting Chart	5-4

LIST OF TABLES (Continued)

SECTION 5 - TROUBLE-SHOOTING (Continued)

Table		Page
5-4.	Power Supply PP-2540/FPN-42, Control Circuits, Functional Section Trouble-Shooting Chart ...	5-7
5-5.	Power Supply PP-2540/FPN-42, Bias Voltage Circuits, Functional Section Trouble-Shooting Chart ...	5-11
5-6.	Power Supply PP-2540/FPN-42, High-Voltage Circuits, Functional Section Trouble-Shooting Chart ...	5-14
5-7.	Typical Troubles	5-17

SECTION 6 - SERVICE AND REPAIR

Table		Page
6-1.	Power Supply PP-2540/FPN-42, Overload Relay Tripping Currents	6-4

SECTION 7 - PARTS LIST

7-1.	Power Supply PP-2540/FPN-42, Maintenance Parts List	7-2
7-2.	Power Supply PP-2540/FPN-42, List of Manufacturers.	7-26

SAFETY NOTICE

This equipment employs voltages which are dangerous and may be fatal if contacted by operating personnel. Extreme caution should be exercised when working with the equipment.

While every practicable safety precaution has been incorporated in this equipment, the following rules must be strictly observed:

KEEP AWAY FROM LIVE CIRCUITS:

Operating personnel must at all times observe all safety regulations. Do not change tubes or make adjustments inside equipment with high voltage on. Under certain conditions, dangerous potentials may exist on circuits with power controls in the off position due to charges retained by capacitors. To avoid casualties, always remove power and discharge and ground circuits prior to touching them.

DON'T SERVICE OR ADJUST ALONE:

Under no circumstances should any person reach within the equipment for the purpose of servicing or adjusting the equipment without the immediate presence or assistance of another person capable of rendering aid.

DON'T TAMPER WITH INTERLOCKS:

Do not depend upon interlocks for protection but always shut off the power. Under no circumstances should any interlock be short-circuited, or tampered with in any way, by other than authorized maintenance personnel, nor should reliance be placed upon the interlock switches for removing voltages from the equipment.

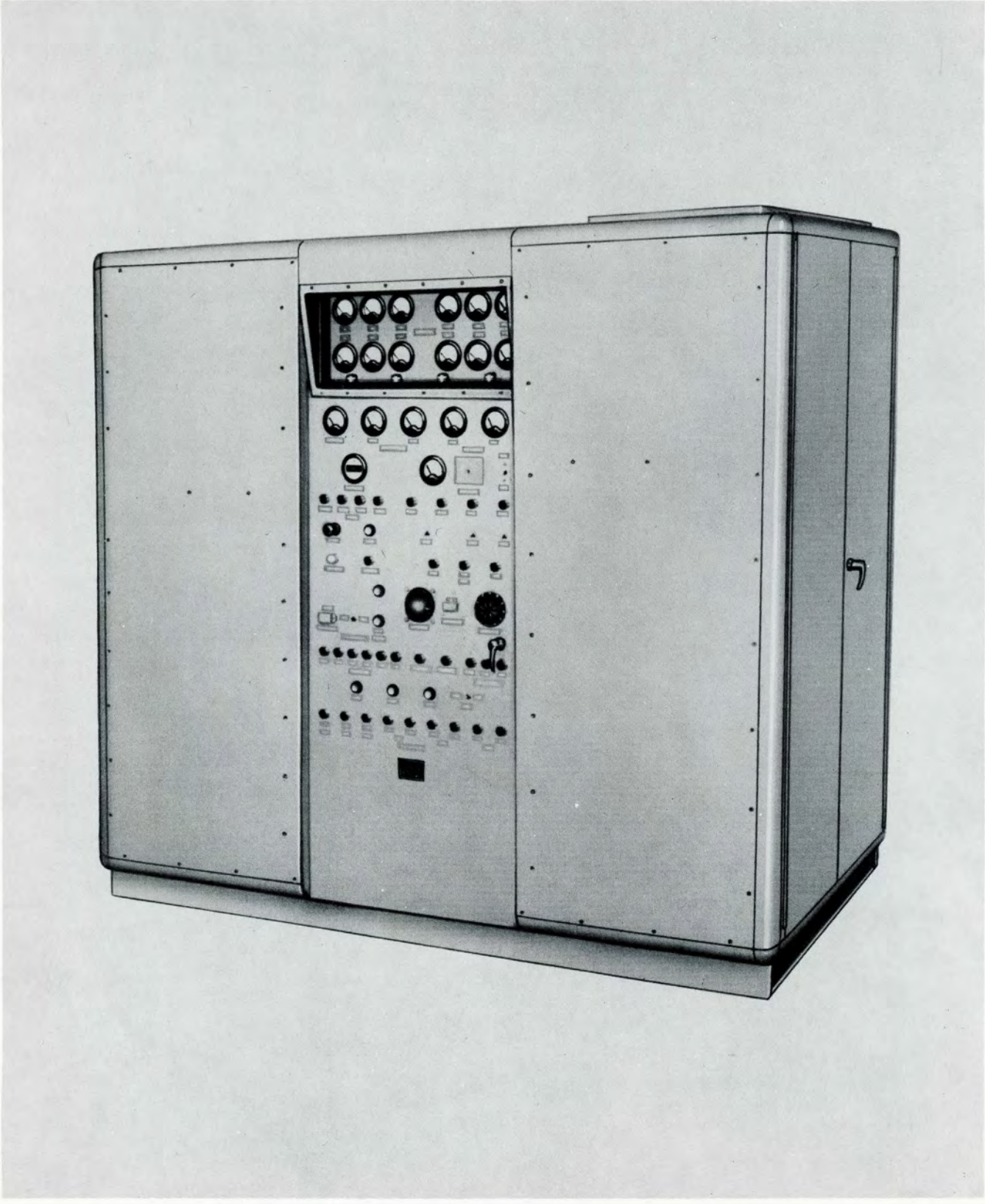

Figure 1-1. Power Supply PP-2540/FPN-42

SECTION 1

GENERAL INFORMATION

1-1. INTRODUCTION.

This manual describes Power Supply PP-2540/FPN-42. It includes instructions for installation, operation, maintenance, troubleshooting, and repair. A detailed theory of operation and a list of maintenance parts are also included.

1-2. FUNCTIONAL DESCRIPTION.

Power Supply PP-2540/FPN-42, hereinafter referred to as the power supply, is a completely self-contained power unit, the specific purpose of which is to supply all the necessary power for a Loran-C Transmitter AN/FPN-42.

1-3. FACTORY OR FIELD CHANGES.

Refer to table 1-1 for a list and description of field changes made to the power supply. This manual as written and all drawings contained herein include the field changes as indicated in table 1-1.

TABLE 1-1. FIELD CHANGES

FIELD CHANGE NUMBER	FIELD CHANGE TITLE AND PURPOSE	SERIAL NUMBERS OF EQUIPMENTS AFFECTED	FIELD CHANGE ACCOMPLISHED IF:
T7	Eliminate pitting of contacts of K7	1-26	TB18-14 and TB29-2 are jumped and TB27-13 and TB33-5 are jumped.
T8	Indicate correct -600 V fuse	1-26	Nameplate for F7 and F9 reads 10A 250 V.
T12	Reliable fuse protection for circuit breaker motor	1-26	F10 is a 5 amp fuse
T14	Protection of transmitter cooling blowers	1-16 (Tcg-41012)	K28 uses N29 thermals K29 uses N8 thermals K30 and K31 use N24 thermals

TABLE 1-1. FIELD CHANGES (Cont)

FIELD CHANGE NUMBER	FIELD CHANGE TITLE AND PURPOSE	SERIAL NUMBERS OF EQUIPMENTS AFFECTED	FIELD CHANGE ACCOMPLISHED IF:
T16	Minimize probability of arc-over of the meter multipliers	1-16	Top insulator posts for R30, R36, and R37 are longer than the bottom insulator posts
T18	Reliable -600 V overload protection	1-26	R41 is a 25 ohm, 55 watt resistor and K37 is installed
T21	High voltage protection on double doors	1-26	S13A and S21A are installed
T26	Protection of transmitter cooling blowers	17-26 (Tcg-41547)	K30 and K31 use N29 thermals K34 uses N22 thermals

1-4. QUICK REFERENCE DATA.

a. POWER REQUIREMENTS. - The power requirements for the power supply are as follows:

(1) LINE VOLTAGE REQUIREMENT. - 208 volts ±10 percent

(2) LINE FREQUENCY REQUIREMENT. - 3 phase, 60 cycles ±5 percent

(3) LINE CURRENT REQUIREMENT. - The following data indicate the line current drawn by the power supply for each of the basic repetition rates. The data require a primary line voltage of 208 volts and a plate voltage of 14 kilovolts. B and C phase line currents range from 83 percent to 92 percent of the A phase line current.

Repetition Rate	Primary Line Current (ØA) (amperes)
HO	320
LO	280
SO	262
SHO	243
SLO	185
SSO	175

(4) LINE POWER FACTOR. - 0.9

b. AVAILABLE OUTPUTS. - Refer to table 1-2 for the current, voltage, and characteristics of each available output.

TABLE 1-2. AVAILABLE OUTPUTS

VOLTAGE	CURRENT	CHARACTERISTICS
1. 15,500 dc	5.50 amp	Regulated voltage, adjustable from 5,300 V to 15,500 V
2. 7,750 dc	250 ma	Regulated voltage, simultaneously and proportionately adjusted with output 1., above
3. 3,825 dc	250 ma	Regulated voltage, simultaneously and proportionately adjusted with output 1., above
4. -600 dc	750 ma	Regulated voltage adjustable to ±30 percent
5. -300 dc	200 ma	Regulated voltage adjustable to ±30 percent
6. 208 ac	300 amp	Three phase, 60 cycle regulated voltage

c. AMBIENT TEMPERATURE RANGE. - 32° to 122°F (0° to 50°C).

1-5. EQUIPMENT LISTS.

a. EQUIPMENT SUPPLIED. - Table 1-3 lists all the equipment supplied and, in addition, lists data pertaining to size, weight, volume, and quantity of the supplied equipment.

TABLE 1-3. POWER SUPPLY PP-2540/FPN-42, EQUIPMENT SUPPLIED

QUANT. PER EQUIP.	NOMENCLATURE		DIMENSIONS (INCHES)			VOLUME (CU. FT)	WEIGHT (POUNDS)
	NAME	DESIGNATION	HEIGHT	WIDTH	DEPTH		
1	Left Cabinet Section	--	82-3/4 6'10 3/4"	30-3/4	49-3/16	73	2700
1	Center Cabinet Section	--	82-3/4	31	49-3/16	73	2300
1	Right Cabinet Section	--	83-3/4	30-3/4	48	72	1700
1	Voltage Regulator	Z1	61-1/2	22-1/8	36-5/8	28	1550
1	Oil Filled Transformer	T1	49	26-3/4	42	32	1640

TABLE 1-3. POWER SUPPLY PP-2540/FPN-42, EQUIPMENT SUPPLIED (Cont)

QUANT. PER EQUIP.	NOMENCLATURE		DIMENSIONS (INCHES)			VOLUME (CU. FT)	WEIGHT (POUNDS)
	NAME	DESIGNATION	HEIGHT	WIDTH	DEPTH		
1	Set of Tubes	V1-V12	18	29	37	11.5	65
	Maintenance Parts Kits						
1	Single Unit Kit	1 of 3	23	35	38	--	150
		2 of 3	22	20	34	--	115
		3 of 3	20	14	27	--	125
1	Double Unit Kit	1 of 4	23	35	39	--	150
		2 of 4	23	35	39	--	150
		3 of 4	24	22	36	--	145
		4 of 4	20	14	27	--	125

b. EQUIPMENT AND PUBLICATIONS REQUIRED BUT NOT SUPPLIED. - Table 1-4 lists equipment and publications required but not supplied with the power supply.

TABLE 1-4. POWER SUPPLY PP-2540/FPN-42, EQUIPMENT AND PUBLICATIONS REQUIRED BUT NOT SUPPLIED

QUANT. PER EQUIP.	NOMENCLATURE		REQUIRED USE	REQUIRED CHARACTERISTICS
	NAME	DESIGNATION		
1	Multimeter	AN/USM-162 or Simpson Model 260	Voltage regulator adjustments and general trouble-shooting	Provide facilities for all voltage and resistance measurements necessary for adjustments and maintenance.

c. SHIPPING DATA. - Table 1-5 lists the shipping crates, the dimensions thereof, and the equipment contained therein, used to ship the power supply.

1-6. ELECTRON TUBE COMPLEMENT.

There are 12 Eimac type 2X3000F electron tubes used in the power supply. These electron tubes are all located in the center cabinet section and are used as high voltage rectifiers. (See figure 6-9.)

TABLE 1-5. SHIPPING DATA

BOX NO.	CONTENTS	DESIGNATION	DIMENSIONS (INCHES)			VOLUME (CU. FT)	WEIGHT (POUNDS)
			HEIGHT	WIDTH	DEPTH		
1T, 2T	Power Supply Assembly Left Cabinet	PP-2540/FPN-42	92	39	58	120	1400
3T, 4T	Center Cabinet		92	39	58	120	1700
5T, 6T	Right Cabinet Electron Tubes Hardware		92	39	58	120	1500
7T, 8T	Plate Transformer		69	35	54	75.5	2750
9T,10T	Plate Voltage Regulator		57	35	41	47.5	2020

1-7. SEMICONDUCTOR DEVICE COMPLEMENT.

There are two semiconductor diode assemblies (SD1 and SD2) which are located on a control panel assembly in the right cabinet section. Semiconductor diode assembly SD1 (figure 5-2) contains eight 1N1443 diodes and a resistor balancing network, and SD2 (figure 6-2) contains 32 1N1126 diodes arranged in two groups of 16 diodes each.

NOTE

Reference designations for individual parts are stamped on the chassis and control panels adjacent to the parts. For convenience in this publication, the hyphen between the letter and the number of the stamped reference designations has been eliminated.

SECTION 2

INSTALLATION

2-1. UNPACKING AND HANDLING.

Unpack and handle the equipment as described in the instruction manual applicable to Loran-C Transmitter AN/FPN-42.

2-2. INSTALLATION.

a. PROCEDURE. - Refer to Volume I of this technical manual for detailed installation procedure.

b. LAYOUT. - The entire system layout is shown in figure 2-1.

c. INTERCONNECTION. - Upon completion of the installation, interconnect the cabinet sections of the power supply, using figure 2-2 as a guide.

2-3. ADJUSTMENTS.

Refer to tables 3-2 and 3-3, and paragraphs 6-5 and 6-6, and perform all the required adjustments.

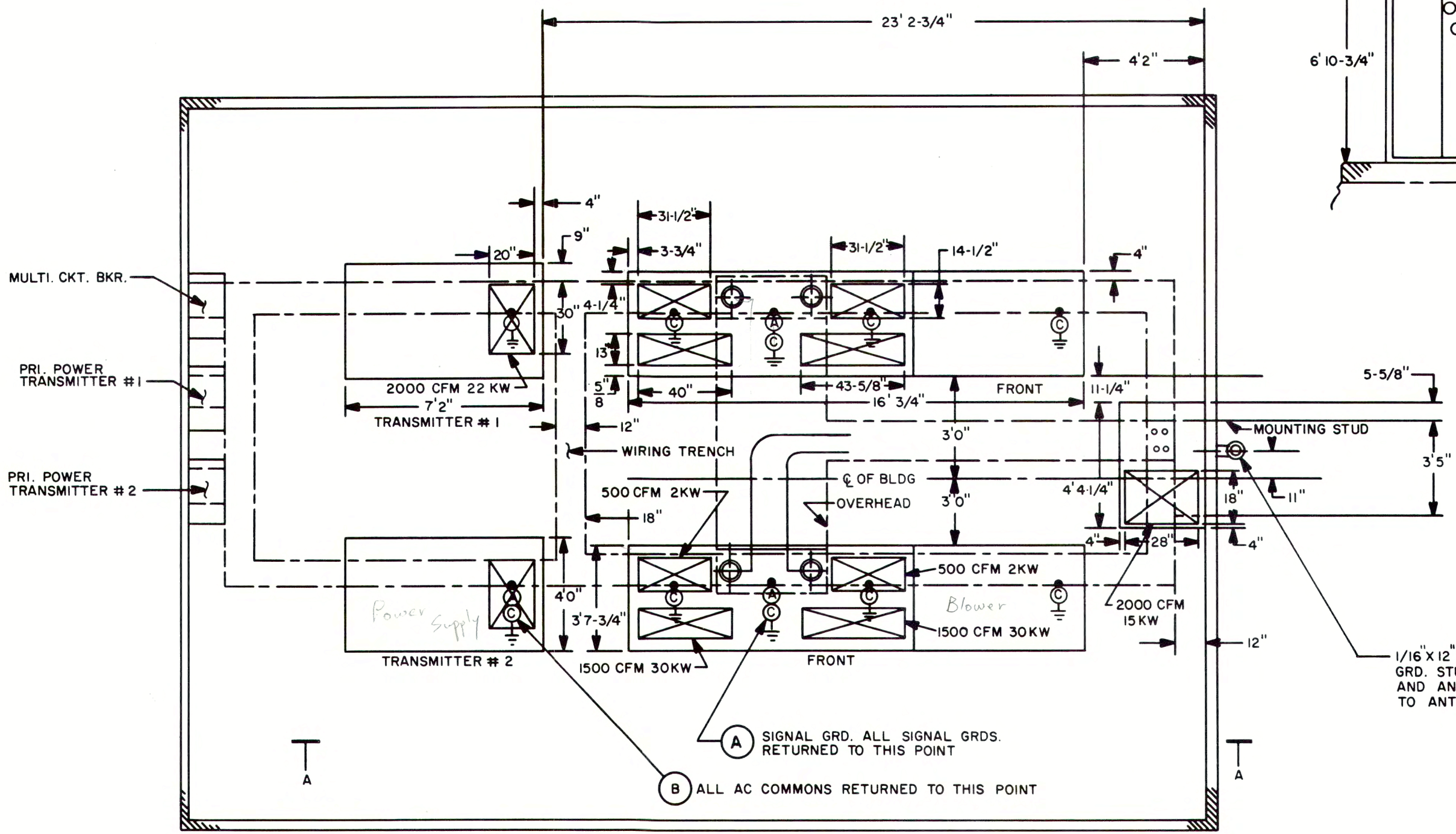

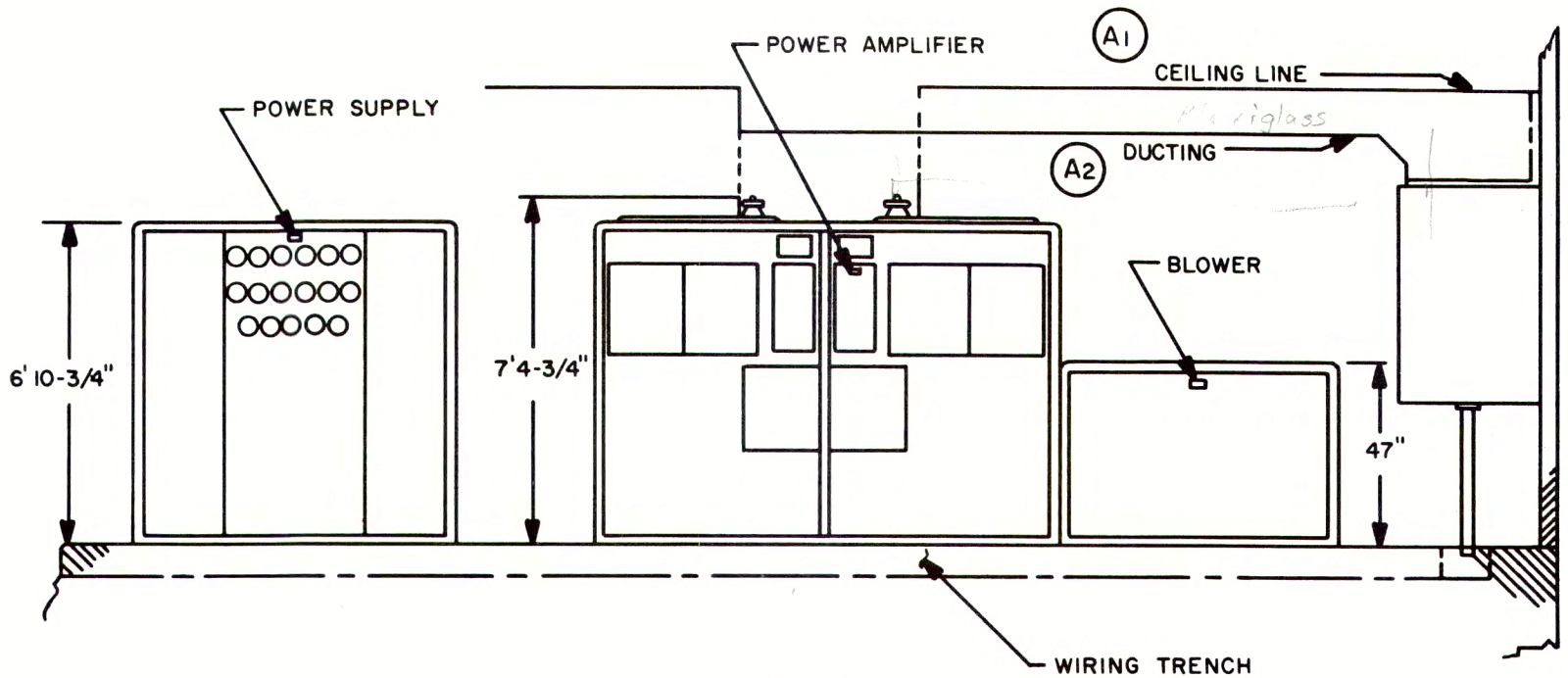

VIEW A-A

NOTES:

1. 1/16 X 3 COPPER STRAP BRAZED TO COPPER FLASHING IN TRENCHES FROM CABINETS.
2. COPPER FLASHING 1/32 TH. X WIDTH OF TRENCH TIED TO STATION GROUND.
3. DISTRIBUTION BOX AND POWER NEUTRAL TIED TO STATION GROUND BY U.S.C.G.
4. ALL SHIELDS AND ARMOR GROUNDED TO STATION GROUND UNLESS OTHERWISE SPECIFIED.
5. PRIMARY POWER TRANSMITTER #2, 208V., 3 PHASE, 4 WIRES, 117KW. BY U.S.C.G.
6. EXTERNAL BUILDING GROUND ROD TO BE TIED TO STATION GROUND.
7. ALL BUILDING STEEL WORK TO BE TIED TO STATION GROUND.
8. ALL DUCTING TERMINATIONS FITTED WITH 3/8 DRIVE-CLEAT JOINT.

Figure 2-1. Installation Diagram

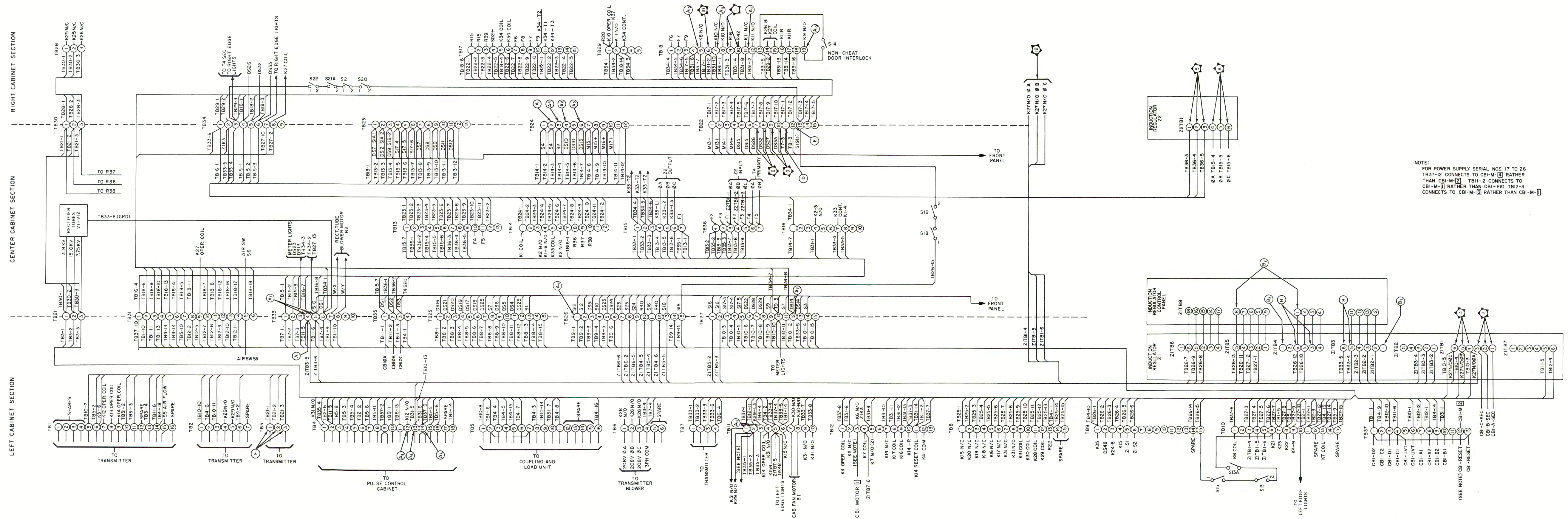

Figure 2-2. Interconnection Diagram

SECTION 3

OPERATOR'S SECTION

3-1. GENERAL.

This section contains instructions for operation, adjustment, substitute methods of operation, and maintenance procedures applicable to the power supply.

3-2. FUNCTIONAL OPERATION.

a. GENERAL. - The function of the power supply is to transform an input of 208 volts, 60 cycles, in 3 phases into all the power outputs required for the operation of Loran-C Transmitter AN/FPN-42. A specific sequential application of these power outputs is necessary in order to protect the equipment and operating personnel, and also to allow sufficient time to make certain adjustments on the transmitter. In addition, there are various time-controlled, safety-sequence circuits which the operator should be aware of in order to keep the equipment functioning. It is possible, by observing the indications on the operating control panel, to determine if the equipment is performing properly.

3-3. OPERATING PROCEDURES.

3-4. OPERATING CONTROLS.

Table 3-1 lists all the controls used by the operator. The index number column refers to the items called out in figure 3-1.

WARNING

No attempt should be made to operate this equipment until the operator is thoroughly familiar with all the operating controls and the proper sequence of their operation.

3-5. OPERATION.

a. GENERAL. - The entire operation of the power supply can be performed automatically as well as manually. However, a definite operational sequence is required for either manner of operation. In addition, special operating procedures are required when one or more of the safety features of the power supply have been put into action.

NOTE

When the power supply is to be used in conjunction with the Loran-C Transmitter AN/FPN-42, the operating procedure of Volume I of this technical manual shall be used.

Key to figure 3-1

1 Meter (M1)
2 Meter (M2)
3 Meter (M3)
4 Meter (M4)
5 Meter (M5)
6 Meter (M6)
7 Meter (M12)
8 Meter (M11)
9 Meter (M10)
10 -300 V BIAS VOLTAGE Meter (M13)
11 -600 V BIAS VOLTAGE Meter (M14)
12 FILAMENT-PLATE Switch (S17)
13 PRIMARY VOLTAGE Switch (S1)
14 PRIMARY VOLTAGE Meter (M18)
15 PLATE ON Indicator (DS14)
16 BIAS ON Indicator (DS15)
17 FIL. READY Indicator (DS13)
18 PLATE VOLTAGE Switch (S3)
19 BIAS VOLTAGE Switch (S2)
20 FIL. VOLTAGE Switch (S4)
21 ØC POWER ON Indicator (DS3)
22 ØB POWER ON Indicator (DS2)
23 ØA POWER ON Indicator (DS1)
24 DIMMER CONTROL Transformer (T9)
25 -300 BIAS ADJUST Control (T7)
26 -600 BIAS ADJUST Control (T8)
27 COUPLING AND LOAD INTERLOCK INDICATOR (DS29)
28 P.A. INTERLOCK INDICATOR (DS28)
29 POWER SUPPLY INTERLOCK INDICATOR (DS22)
30 LOW LINE ALARM DISABLE INDICATOR (DS30)
31 LOW LINE ALARM Switch (S12)
32 1A 250V -600 BIAS F9 Indicator (DS33)
33 1A 250V -600 BIAS F7 Indicator (DS27)
34 1A 250V -300 BIAS F8 Indicator (DS32)
35 1A 250V -300 BIAS F6 Indicator (DS26)
36 LOW LINE VOLTS RESET Switch (S11)
37 25A 250V CONT. TRANS. F5 Indicator (DS12)
38 25A 250V CONT. TRANS. F4 Indicator (DS11)
39 3 STRIKE RESET Switch (S9)
40 70A 250V ØC FIL F3 Indicator (DS9)
41 70A 250V ØB FIL F2 Indicator (DS8)
42 70A 250V ØA FIL F1 Indicator (DS7)
43 LOW LINE VOLTS INDICATOR (DS31)
44 OVERLOAD RESET Switch (S10)
45 -300 V OVERLOAD INDICATOR (DS18)
46 -600 V OVERLOAD INDICATOR (DS17)
47 3.8 KV OVERLOAD INDICATOR (DS19)
48 7.75 KV OVERLOAD INDICATOR (DS20)
49 15.5 KV OVERLOAD INDICATOR (DS21)
50 BKR. TRIP Indicator (DS16)
51 LOWER MAN. PLATE VOLT ADJUST Switch (S24)
52 PLATE VOLTAGE CONTROL Switch (S16)
53 AUTO PLATE VOLT ADJUST Control (R40)
54 RAISE MAN. PLATE VOLT ADJUST Switch (S23)
55 PLATE VOLTS MAX. Indicator (DS23)
56 PLATE VOLTS MIN. Indicator (DS24)
57 START Switch (S8)
58 FIL. ON Indicator (DS10)
59 EMERGENCY STOP Switch (S7)
60 P.A. CAB. BLOWERS ON Indicator (DS25)
61 P.A. TUBE BLOWERS ON Indicator (DS4)
62 POWER SUPPLY CAB. BLOWERS ON Indicator (DS5)
63 POWER SUPPLY TUBE BLOWERS ON Indicator (DS6)
64 ELAPSED TIME Meter (M19)
65 3.8 KV DRIVER PLATE VOLTAGE Meter (M17)
66 7.75 KV DRIVER PLATE VOLTAGE Meter (M16)
67 15.5 KV PLATE VOLTAGE Meter (M15)
68 Meter (M9)
69 Meter (M8)
70 Meter (M7)

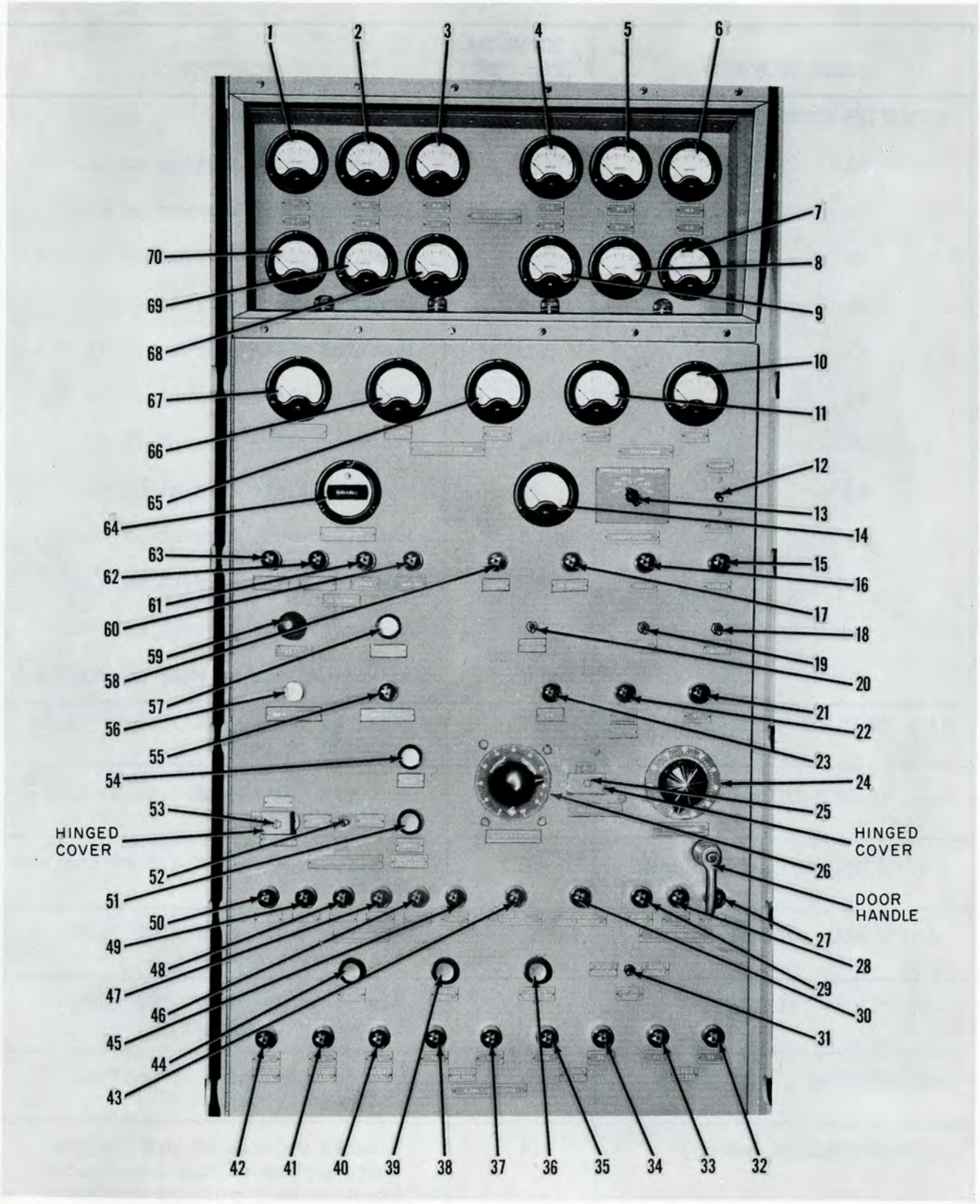

Figure 3-1. Front Panel Controls and Indicators, Center Cabinet Section (Serial No's 1-16), Front View

TABLE 3-1. OPERATING CONTROLS, POWER SUPPLY PP-2540/FPN-42

PANEL MARKING	INDEX NO. (Fig. 3-1)	FUNCTION
RECTIFIER CURRENT		
M1	1	Measures plate current of V1.
M2	2	Measures plate current of V2.
M3	3	Measures plate current of V3.
M4	4	Measures plate current of V4.
M5	5	Measures plate current of V5.
M6	6	Measures plate current of V6.
M7	70	Measures plate current of V7.
M8	69	Measures plate current of V8.
M9	68	Measures plate current of V9.
M10	9	Measures plate current of V10.
M11	8	Measures plate current of V11.
M12	7	Measures plate current of V12.
15.5 KV PLATE VOLTAGE	67	Measures voltage of 15.5 kv high-voltage output.
7.75 KV DRIVER PLATE VOLTAGE	66	Measures voltage of 7.75 kv high-voltage output.
3.8 KV DRIVER PLATE VOLTAGE	65	Measures voltage of 3.8 kv high-voltage output.
-600 V BIAS VOLTAGE	11	Measures voltage of -600 volt bias supply output.
-300 V BIAS VOLTAGE	10	Measures voltage of -300 volt bias supply output.
ELAPSED TIME	64	Records total time of applied filament voltage.
PRIMARY VOLTAGE (meter)	14	Measures voltage of each of the three phases of the unregulated input primary voltage and each of the three phases of the regulated output primary voltage.

TABLE 3-1. OPERATING CONTROLS, POWER SUPPLY PP-2540/FPN-42 (Cont)

PANEL MARKING	INDEX NO. (Fig. 3-1)	FUNCTION
PRIMARY VOLTAGE (meter) (Cont)	14	Voltage measurement selection is controlled by switches (13 and 12, fig. 3-1).
PRIMARY VOLTAGE (switch)	13	Selects for voltage measurement, by meter (14, fig. 3-1), the three phases of the unregulated input primary voltage and the three phases of the regulated output primary voltage.
FILAMENT - PLATE (switch)	12	Determines the source of regulated primary voltage to be measured by meter (14, fig. 3-1) and phase-selected by switch (13).
POWER SUPPLY TUBE BLOWERS ON	63	When lit, signifies that blower starting relay K31 is energized.
POWER SUPPLY CAB. BLOWERS ON	62	When lit, signifies that blower starting relay K30 is energized.
P.A. TUBE BLOWERS ON	61	When lit, signifies that blower starting relay K28 is energized.
P.A. CAB BLOWERS ON	60	When lit, signifies that blower starting relay K29 is energized.
FIL. ON	58	When lit, signifies that full filament voltage has been applied to rectifier tubes V1 through V12.
FIL. READY	17	When lit [minimum of 300 seconds after indicator (58) glows], signifies that filaments of all vacuum tubes are warmed up.
BIAS ON	16	When lit, signifies that low-voltage output circuits have been energized.
PLATE ON	15	When lit, signifies that high-voltage output circuits have been energized.
EMERGENCY STOP	59	When depressed, completely shuts down the entire system.

TABLE 3-1. OPERATING CONTROLS, POWER SUPPLY PP-2540/FPN-42 (Cont)

PANEL MARKING	INDEX NO. (Fig. 3-1)	FUNCTION
START	57	When depressed, starts the initial sequence of operation.
FIL. VOLTAGE	20	On-off switch for filaments of V1 through V12 in power supply.
BIAS VOLTAGE	19	On-off switch for bias supply outputs.
PLATE VOLTAGE	18	On-off switch for high-voltage outputs.
PLATE VOLTS MIN.	56	When lit, signifies that high-voltage outputs are at their minimum setting.
PLATE VOLTS MAX.	55	When lit, signifies that high-voltage outputs are at their maximum setting.
ØA POWER ON	23	When lit, signifies that phase A of the primary input voltage is present in the equipment.
ØB POWER ON	22	When lit, signifies that phase B of the primary input voltage is present in the equipment.
ØC POWER ON	21	When lit, signifies that phase C of the primary input voltage is present in the equipment.
AUTO PLATE VOLT ADJUST	53	Determines the voltage setting of the automatically regulated high-voltage outputs when switch (52, fig. 3-1) is in AUTO position.
PLATE VOLTAGE CONTROL	52	Selects manual or automatic regulation of high-voltage outputs.
RAISE MAN. PLATE VOLT ADJUST	54	When depressed, raises voltages of high-voltage outputs, if switch (52, fig. 3-1) is in MANUAL position.
LOWER MAN. PLATE VOLT ADJUST	51	When depressed, lowers voltages of high-voltage outputs, if switch (52, fig. 3-1) is in MANUAL position.

TABLE 3-1. OPERATING CONTROLS, POWER SUPPLY PP-2540/FPN-42 (Cont)

PANEL MARKING	INDEX NO. (Fig. 3-1)	FUNCTION
-600 BIAS ADJUST	26	Varies -600 V bias voltage.
-300 BIAS ADJUST	25	Varies -300 V bias voltage.
DIMMER CONTROL	24	Varies brightness of panel edge lighting.
BKR. TRIP	50	When not glowing, signifies that circuit breaker has tripped (may be already re-set automatically but indicator will remain out).
OVERLOAD INDICATOR(S)		Consist(s) of five indicators, any one of which will be extinguished as a result of an overload. Indicator(s) will remain extinguished until re-set by OVERLOAD RESET switch (44, fig. 3-1).
15.5 KV OVERLOAD INDICATOR	49	When not glowing, signifies that overload has occurred in 15.5 kv high-voltage output circuit.
7.75 KV OVERLOAD INDICATOR	48	When not glowing, signifies that overload has occurred in 7.75 kv high-voltage output circuit.
3.8 KV OVERLOAD INDICATOR	47	When not glowing, signifies that overload has occurred in 3.8 kv high-voltage output circuit.
-600 V OVERLOAD INDICATOR	46	When not glowing, signifies that overload has occurred in -600 V bias supply output circuit.
-300 V OVERLOAD INDICATOR	45	When not glowing, signifies that overload has occurred in -300 V bias supply output circuit.
LOW LINE VOLTS INDICATOR	43	When flashing, signifies that incoming primary voltage is less than 90 percent of normal. Will also flash during initial starting sequence.
LOW LINE ALARM DISABLE INDICATOR	30	When glowing, signifies that switch (31) is in ALARM DISABLE position.

TABLE 3-1. OPERATING CONTROLS, POWER SUPPLY PP-2540/FPN-42 (Cont)

PANEL MARKING	INDEX NO. (Fig. 3-1)	FUNCTION
INTERLOCK INDICATOR(S)		Consist(s) of three panel lamps which, when unlit, signify any open interlock switch in the system.
POWER SUPPLY INTERLOCK INDICATOR	29	When not glowing, signifies that one or more of the interlock switches in the power supply is open.
P.A. INTERLOCK INDICATOR	28	When not glowing, signifies that one or more of the interlock switches in the Loran-C Power Amplifier is open.
COUPLING & LOAD INTERLOCK INDICATOR	27	When not glowing, signifies that one or more of the interlock switches in the Loran-C Coupling and Load is open.
OVERLOAD RESET	44	When depressed, will re-set any OVERLOAD INDICATOR that has been extinguished as a result of an overload.
3 STRIKE RESET	39	When depressed, will re-set 3-strike relay K4 in the event three successive overloads occur in a period of 90 seconds.
LOW LINE VOLTS RESET	36	When depressed, will re-set under-voltage safety circuit, stop LOW LINE VOLTS INDICATOR (43, fig. 3-1) from flashing, and shut off alarm horn DS48 if LOW LINE ALARM switch (31) is in ALARM OPERATIVE position. LOW LINE VOLTS RESET switch (36) is also used during initial starting sequence.
LOW LINE ALARM	31	Will permit alarm horn DS48 to sound when primary voltage drops below 90 percent of its rated value when in ALARM OPERATIVE position, and will disable alarm horn DS48 when in ALARM DISABLE position.

TABLE 3-1. OPERATING CONTROLS, POWER SUPPLY PP-2540/FPN-42 (Cont)

PANEL MARKING	INDEX NO. (Fig. 3-1)	FUNCTION
BLOWN FUSE INDICATOR(S)		Consist(s) of nine indicators, any one of which, when lit, signifies a burned out fuse.
70A 250 V ØA FIL F1	42	When lit, signifies that fuse F1 (fig. 6-12) is burned out.
70A 250 V ØB FIL F2	41	When lit, signifies that fuse F2 (fig. 6-12) is burned out.
70A 250 V ØC FIL F3	40	When lit, signifies that fuse F3 (fig. 6-12) is burned out.
25A 250 V CONT. TRANS. F4	38	When lit, signifies that fuse F4 (fig. 6-12) is burned out.
25A 250 V CONT. TRANS. F5	37	When lit, signifies that fuse F5 (fig. 6-12) is burned out.
1A 250 V -300 BIAS F6	35	When lit, signifies that fuse F6 (fig. 6-2) is burned out.
1A 250 V -300 BIAS F8	34	When lit, signifies that fuse F8 (fig. 6-2) is burned out.
10A 250 V -600 BIAS F7	33	When lit, signifies that fuse F7 (fig. 6-2) is burned out.
10A 250 V -600 BIAS F9	32	When lit, signifies that fuse F9 (fig. 6-2) is burned out.

b. MANUAL SEQUENCE OF OPERATION. - Table 3-2 describes the sequence of manual operation. Perform the operating steps in table 3-2 in the order indicated, paying particular attention to the normal indications that result from the performance of a particular step. Should any deviation from the normal indications occur, refer to the instructions in paragraph 3-5.d.

c. AUTOMATIC SEQUENCE OF OPERATION. - Table 3-3 describes the sequence of automatic operation. Perform the operating steps in the order indicated, paying particular attention to the normal indications that result from the performance of a particular step. Should any deviation from the normal indication occur, refer to the instructions in paragraph 3-5.d.

d. OPERATING PROCEDURES UNDER SPECIAL CONDITIONS. - If, during manual or automatic operation of the power supply, a deviation from the normal indications listed in table 3-2 or 3-3 occurs, proceed as follows:

(1) Find the abnormal indication as listed in table 3-4. If the abnormal indication is not shown, higher echelon maintenance is needed.

(2) Follow the indicated corrective procedure for the particular abnormal indication.

(3) If, after performing the indicated corrective procedure, the equipment does not function, refer to sections 5 and 6.

NOTE

All item references in table 3-4 refer to figure 3-1.

TABLE 3-2. SEQUENCE OF MANUAL OPERATION

NOTE

Before energizing the power supply, make the necessary checks to insure that the proper transmitter inputs from the Pulse Control Cabinet are present and that the transmitter output is connected to the antenna or dummy load, as desired. Refer to the manual for the AN/FPN-42 Transmitter.

STEP	CONTROL OR SWITCH		PROCEDURE	INDICATOR	INDEX NO. (Fig. 3-1)	NORMAL INDICATION
	PANEL MARKING	INDEX NO. (Fig. 3-1)				
1	FIL. VOLTAGE	20	Place in OFF (down) position.			
	BIAS VOLTAGE	19	Place in OFF (down) position.			
	PLATE VOLTAGE	18	Place in OFF (down) position.			
	LOW LINE ALARM	31	Place in ALARM DISABLE position.			
	PLATE VOLTAGE CONTROL	52	Place in MANUAL position.			
2	External line power switch (not in power supply)		Apply primary voltage.	ØA POWER ON indicator	23	Glows
				ØB POWER ON indicator	22	Glows
				ØC POWER ON indicator	21	Glows
3	PRIMARY VOLTAGE	13	Check primary voltage as follows: a. Place PRIMARY VOLTAGE switch (13) in UNREGULATED ØA, ØB, and ØC positions, successively, and read PRIMARY VOLTAGE meter (14).	PRIMARY VOLTAGE meter	14	Meter (14) reads 208 volts ac ±10% in procedure a. and 226 volts ac ±2% in procedure b.

TABLE 3-2. SEQUENCE OF MANUAL OPERATION (Cont)

STEP	CONTROL OR SWITCH		PROCEDURE	INDICATOR	INDEX NO. (Fig. 3-1)	NORMAL INDICATION
	PANEL MARKING	INDEX NO. (Fig. 3-1)				
3 (Cont)	FILAMENT-PLATE	12	b. Place FILAMENT-PLATE switch (12) in FILAMENT position, and PRIMARY VOLTAGE switch (13) in REGULATED ØA, ØB, and ØC positions, successively, and read meter (14).			
4	START	57	Depress START switch.	POWER SUPPLY TUBE BLOWERS ON indicator	63	Glows
				POWER SUPPLY CAB. BLOWERS ON indicator	62	Glows
				P.A. TUBE BLOWERS ON indicator	61	Glows
				P.A. CAB. BLOWERS ON indicator	60	Glows
				BKR. TRIP indicator	50	Glows

TABLE 3-2. SEQUENCE OF MANUAL OPERATION (Cont)

STEP	CONTROL OR SWITCH		PROCEDURE	INDICATOR	INDEX NO. (Fig. 3-1)	NORMAL INDICATION
	PANEL MARKING	INDEX NO. (Fig. 3-1)				
4 (Cont)	START (Cont)	57	Depress START switch. (Cont)	15.5 KV OVERLOAD INDICATOR	49	Glows
				7.75 KV OVERLOAD INDICATOR	48	Glows
				3.8 KV OVERLOAD INDICATOR	47	Glows
				-600 V OVERLOAD INDICATOR	46	Glows
				-300 V OVERLOAD INDICATOR	45	Glows
				LOW LINE VOLTS INDICATOR	43	Flashes
				LOW LINE ALARM DISABLE INDICATOR	30	Glows
				POWER SUPPLY INTERLOCK INDICATOR	29	Glows

TABLE 3-2. SEQUENCE OF MANUAL OPERATION (Cont)

STEP	CONTROL OR SWITCH		PROCEDURE	INDICATOR	INDEX NO. (Fig. 3-1)	NORMAL INDICATION
	PANEL MARKING	INDEX NO. (Fig. 3-1)				
4 (Cont)	START (Cont)	57	Depress START switch. (Cont)	P.A. INTER-LOCK INDI-CATOR	28	Glows
				COUPLING & LOAD IN-TERLOCK INDICATOR	27	Glows
				PLATE VOLTS MIN. indicator	56	Glows (not in-stantaneously)
5	LOW LINE VOLTS RESET	36	Depress LOW LINE VOLTS RESET switch.	LOW LINE VOLTS IN-DICATOR	43	Stops flashing and remains lit.
6	DIMMER CONTROL	24	Rotate as required to obtain desired edge-lighting brightness.	Edge light-ing panel lamps (no panel marking)		Edge-lighting brightens or dims.
7	FIL. VOLTAGE	20	Place in ON (up) position.	FIL. ON indicator	58	Glows 15 seconds after FIL. VOLT-AGE switch (20) is placed on.
				FIL. READY indicator	17	Glows 300 seconds after FIL. ON indicator (58) glows.

TABLE 3-2. SEQUENCE OF MANUAL OPERATION (Cont)

STEP	CONTROL OR SWITCH		PROCEDURE	INDICATOR	INDEX NO. (Fig. 3-1)	NORMAL INDICATION
	PANEL MARKING	INDEX NO. (Fig. 3-1)				
7 (Cont)	FIL. VOLTAGE (Cont)	20	Place in ON (up) position. (Cont)	ELAPSED TIME meter	64	Starts operating.
8	BIAS VOLTAGE	19	Place in ON (up) position.	BIAS ON indicator	16	Glows after FIL. READY (17) glows.
9	-300 BIAS ADJUST	25	Rotate as required to obtain desired voltage output.	-300 V BIAS VOLTAGE meter	10	Reads voltage output of -300 volt bias as set by -300 BIAS ADJUST control.
10	-600 BIAS ADJUST	26	Rotate as required to obtain desired voltage output.	-600 V BIAS VOLTAGE meter	11	Reads voltage output of -600 volt bias as set by -600 BIAS ADJUST control.
11	PLATE VOLTAGE	18	Place in up position (on).	PLATE ON indicator	15	Glows
				RECTIFIER CURRENT meters	1 through 9, 68, 69, 70	Each RECTIFIER CURRENT meter reads plate current of its associated rectifier tube.

TABLE 3-2. SEQUENCE OF MANUAL OPERATION (Cont)

STEP	CONTROL OR SWITCH: PANEL MARKING	CONTROL OR SWITCH: INDEX NO. (Fig. 3-1)	PROCEDURE	INDICATOR	INDEX NO. (Fig. 3-1)	NORMAL INDICATION
11 (Cont)	PLATE VOLTAGE (Cont)	18	Place in up position (on). (Cont)	15.5 KV PLATE VOLTAGE meter	67	Reads approximately 5 kilovolts.
				7.75 KV DRIVER PLATE VOLTAGE meter	66	Reads approximately 2.5 kilovolts.
				3.8 KV DRIVER PLATE VOLTAGE meter	65	Reads approximately 1.25 kilovolts.
12	PRIMARY VOLTAGE	13	Check primary voltage as follows: a. Perform procedures a. and b. of step 3.	PRIMARY VOLTAGE meter	14	Meter reads 208 V ±10% ac in UNREGULATED ØA, ØB, and ØC positions of PRIMARY VOLTAGE switch (13) and 226 volts ac ±2% in REGULATED ØA, ØB, and ØC positions.
	FILAMENT-PLATE	12	b. Perform procedure b. of step 3 with FILAMENT-PLATE switch (12) in PLATE position.			Meter does not read 208 volts ac ±2%. This position is used only to monitor plate Inductrol output.

TABLE 3-2. SEQUENCE OF MANUAL OPERATION (Cont)

STEP	CONTROL OR SWITCH		PROCEDURE	INDICATOR	INDEX NO. (Fig. 3-1)	NORMAL INDICATION
	PANEL MARKING	INDEX NO. (Fig. 3-1)				
13	LOW LINE ALARM	31	Place in ALARM OPERATIVE position.	LOW LINE ALARM DISABLE INDICATOR	30	Extinguishes and alarm horn does not sound.
14	RAISE MAN. PLATE VOLT ADJUST	54	Depress and hold RAISE switch until the 15.5 KV, 7.75 KV, and 3.8 KV outputs have reached the desired level. These three high-voltage outputs will raise and lower simultaneously and in proportion to each other.	15.5 KV PLATE VOLTAGE meter	67	Meters (67, 66, and 65) indicate output voltage of high-voltage outputs as set by RAISE switch.
				7.75 KV DRIVER PLATE VOLTAGE meter	66	
				3.8 KV DRIVER PLATE VOLTAGE meter	65	
				RECTIFIER CURRENT meter	1 through 9, 68, 69, 70	Indicated current on meters rises until RAISE switch is released.
				PLATE VOLTS MIN. indicator	56	Extinguishes

TABLE 3-2. SEQUENCE OF MANUAL OPERATION (Cont)

STEP	CONTROL OR SWITCH		PROCEDURE	INDICATOR	INDEX NO. (Fig. 3-1)	NORMAL INDICATION
	PANEL MARKING	INDEX NO. (Fig. 3-1)				
14 (Cont)	RAISE MAN. PLATE VOLT ADJUST (Cont)	54		PLATE VOLTS MAX. indicator	55	Glows only if maximum high voltage output is reached.
15	LOWER MAN. PLATE VOLT ADJUST	51	To lower the high-voltage outputs, depress LOWER switch and hold until desired voltages are reached.	15.5 KV PLATE VOLTAGE meter	67	Meters (67, 66, and 65) indicate output voltage of high-voltage outputs as set by LOWER switch.
				7.75 KV DRIVER PLATE VOLTAGE meter	66	
				3.8 KV DRIVER PLATE VOLTAGE meter	65	
				RECTIFIER CURRENT meters	1 through 9, 68, 69, 70	Indicated current on meters decreases until LOWER switch is released.

TABLE 3-2. SEQUENCE OF MANUAL OPERATION (Cont)

STEP	CONTROL OR SWITCH		PROCEDURE	INDICATOR	INDEX NO. (Fig. 3-1)	NORMAL INDICATION
	PANEL MARKING	INDEX NO. (Fig. 3-1)				
15 (Cont)	LOWER MAN. PLATE VOLT ADJUST (Cont)	51		PLATE VOLTS MIN. indicator	56	Glows when minimum output of high-voltage outputs is reached.
				PLATE VOLTS MAX. indicator	55	Extinguishes

TABLE 3-3. SEQUENCE OF AUTOMATIC OPERATION

NOTE

Before energizing the power supply, make the necessary checks to insure that the proper transmitter inputs from the Pulse Control Cabinet are present and that the transmitter output is connected to the antenna or dummy load, as desired. Refer to the manual for the AN/FPN-42 Transmitter.

STEP	CONTROL OR SWITCH		PROCEDURE	INDICATOR	INDEX NO. (Fig. 3-1)	NORMAL INDICATION
	PANEL MARKING	INDEX NO. (Fig. 3-1)				
1	FIL. VOLTAGE	20	Place in ON (up) position.			
	BIAS VOLTAGE	19	Place in ON (up) position.			
	PLATE VOLTAGE	18	Place in ON (up) position.			
	LOW LINE ALARM	31	Place in ALARM DISABLE position.			
	PLATE VOLTAGE CONTROL	52	Place in AUTO position.			
2	Use external line switch as no line switch is provided in the equipment.		Apply primary voltage.	ØA POWER ON indicator	23	Glows
				ØB POWER ON indicator	22	Glows
				ØC POWER ON indicator	21	Glows
				70A 250 V ØA FIL F1 indicator	42	Does not glow
				70A 250 V ØB FIL F2 indicator	41	Does not glow

TABLE 3-3. SEQUENCE OF AUTOMATIC OPERATION (Cont)

STEP	CONTROL OR SWITCH: PANEL MARKING	CONTROL OR SWITCH: INDEX NO. (Fig. 3-1)	PROCEDURE	INDICATOR	INDEX NO. (Fig. 3-1)	NORMAL INDICATION
2 (Cont)	Use external line switch as no line switch is provided in the equipment. (Cont)		Apply primary voltage. (Cont)	70A 250 V ØC FIL F3 indicator	40	Does not glow
				25A 250 V CONT. TRANS. F4 indicator	38	Does not glow
				25A 250 V CONT. TRANS. F5 indicator	37	Does not glow
3	START	57	Depress START switch.	POWER SUPPLY TUBE BLOWERS ON indicator	63	Glows
				POWER SUPPLY CAB. BLOWERS ON indicator	62	Glows
				P.A. TUBE BLOWERS ON indicator	61	Glows
				P.A. CAB. BLOWERS ON indicator	60	Glows

TABLE 3-3. SEQUENCE OF AUTOMATIC OPERATION (Cont)

STEP	CONTROL OR SWITCH		PROCEDURE	INDICATOR	INDEX NO. (Fig. 3-1)	NORMAL INDICATION
	PANEL MARKING	INDEX NO. (Fig. 3-1)				
3 (Cont)	START (Cont)	57	Depress START switch. (Cont)	ELAPSED TIME meter	64	Operates
				FIL. ON indicator	58	Glows 15 seconds after START switch is depressed.
				FIL. READY indicator	17	Glows 300 seconds (approx) after FIL. ON indicator (58) glows.
				BIAS ON indicator	16	Glows after FIL. READY indicator (17) glows.
				PLATE ON indicator	15	Glows after BIAS ON indicator (16) glows.
				BKR. TRIP indicator	50	Glows
				15.5 KV OVERLOAD INDICATOR	49	Glows
				7.75 KV OVERLOAD INDICATOR	48	Glows

TABLE 3-3. SEQUENCE OF AUTOMATIC OPERATION (Cont)

STEP	CONTROL OR SWITCH		PROCEDURE	INDICATOR	INDEX NO. (Fig. 3-1)	NORMAL INDICATION
	PANEL MARKING	INDEX NO. (Fig. 3-1)				
3 (Cont)	START (Cont)	57	Depress START switch. (Cont)	3.8 KV OVERLOAD INDICATOR	47	Glows
				-600 V OVERLOAD INDICATOR	46	Glows
				-300 V OVERLOAD INDICATOR	45	Glows
				LOW LINE VOLTS INDICATOR	43	Flashes
				LOW LINE ALARM DISABLE INDICATOR	30	Glows
				POWER SUPPLY INTERLOCK INDICATOR	29	Glows
				P.A. INTERLOCK INDICATOR	28	Glows

TABLE 3-3. SEQUENCE OF AUTOMATIC OPERATION (Cont)

STEP	CONTROL OR SWITCH		PROCEDURE	INDICATOR	INDEX NO. (Fig. 3-1)	NORMAL INDICATION
	PANEL MARKING	INDEX NO. (Fig. 3-1)				
3 (Cont)	START (Cont)	57	Depress START switch. (Cont)	COUPLING & LOAD INTERLOCK INDICATOR	27	Glows
4	DIMMER CONTROL	24	Rotate as required to obtain desired lighting brightness.			Edge lighting brightens or dims.
5	LOW LINE VOLTS RESET	36	Depress LOW LINE VOLTS RESET switch	LOW LINE VOLTS INDICATOR	43	Stops flashing and remains glowing.
6	LOW LINE ALARM	31	Place in ALARM OPERATIVE position.	LOW LINE ALARM DISABLE INDICATOR	30	Extinguishes and alarm horn does not sound.
7	-300 BIAS ADJUST	25	Rotate to the desired setting.	-300 V BIAS VOLTAGE meter	10	Indicates voltage as set by -300 BIAS ADJUST control.
8	-600 BIAS ADJUST	26	Rotate to the desired setting.	-600 V BIAS VOLTAGE meter	11	Indicates voltage as set by -600 BIAS ADJUST control.
9	AUTO PLATE VOLT ADJUST	53	Lift up hinged access cover and, using a screwdriver, rotate to the desired setting.	15.5 KV PLATE VOLTAGE meter	67	Indicates voltage of 15.5 kv output as set by AUTO PLATE VOLT ADJUST control.

TABLE 3-3. SEQUENCE OF AUTOMATIC OPERATION (Cont)

STEP	CONTROL OR SWITCH		PROCEDURE	INDICATOR	INDEX NO. (Fig. 3-1)	NORMAL INDICATION
	PANEL MARKING	INDEX NO. (Fig. 3-1)				
9 (Cont)	AUTO PLATE VOLT ADJUST (Cont)	53	NOTE The AUTO PLATE VOLT ADJUST control will vary the 15.5 KV, 7.75 KV, and 3.8 KV outputs simultaneously and in proportion to each other.	7.75 KV DRIVER PLATE VOLTAGE meter	66	Indicates voltage of 7.75 kv output as set by AUTO PLATE VOLT ADJUST control.
				3.8 KV DRIVER PLATE VOLTAGE meter	65	Indicates voltage of 3.8 kv output as set by AUTO PLATE VOLT ADJUST control.
				RECTIFIER CURRENT meters	1 through 9, 68, 69, 70	Indicate current drawn by each rectifier tube.
10	PRIMARY VOLTAGE FILAMENT-PLATE	13 12	Check out the 3 phases of unregulated primary voltage and the 3 phases of regulated primary voltage, using PRIMARY VOLTAGE switch (13) and FILAMENT-PLATE switch (12).	PRIMARY VOLTAGE meter	14	Indicates primary voltage as selected by PRIMARY VOLTAGE switch (13) and FILAMENT-PLATE switch (12).

TABLE 3-4. CORRECTIVE PROCEDURES FOR ABNORMAL INDICATIONS

ABNORMAL INDICATION	CORRECTIVE PROCEDURE
One or more of POWER ON indicators (21, 22, 23) does not light	1. Measure input line voltage as follows: a. Place PRIMARY VOLTAGE switch (13) in UNREGULATED ØA, ØB, and ØC positions. b. Note reading of PRIMARY VOLTAGE meter (14) in each phase position. c. If meter (14) reads 208 volts ±10% in each phase position of switch (13), replace defective indicator and proceed with operation.
BKR. TRIP indicator (50) does not light	2. Depress OVERLOAD RESET switch (44). If indicator does not light, replace indicator. If indicator lights, release switch (44). If indicator remains lit, proceed with normal operation. If indicator goes out, depress 3 STRIKE RESET switch (39).
One or more of OVERLOAD INDICATOR lamps (45 through 49) does not light	3. Repeat procedure 2., above.
LOW LINE VOLTS INDICATOR (43) does not glow at all in initial cycle of operation	4. Replace indicator. If condition still exists, throw LOW LINE ALARM switch (31) to ALARM OPERATIVE position. If alarm does not sound, low line voltage alarm system is inoperative.
One or more of INTERLOCK INDICATOR lamps (27, 28, 29) does not light	5. Replace unlit indicator if defective. Check and secure all access panels and doors.
One or more of BLOWN FUSE INDICATOR lamps (32 through 35, 37, 38, 40, 41, 42) lights	6. Indicates blown fuse. See figure 6-12 for fuses F1 through F5 and figure 6-2 for F6 through F9 and replace blown fuse as indicated by reference designation plate under lit BLOWN FUSE INDICATOR panel lamp. Refer to paragraph 6-7b.(3) for fuse replacement procedure.
One or more of BLOWERS ON indicators (60, 61, 62, 63) does not light	7. Replace indicator lamp if defective. Reset thermal overload on the respective blower starter relay (K28, K29, K30, K31). If indicator still does not light, check for malfunction in blower starter or blower motor circuitry.
BIAS ON indicator (16) does not light	8. Replace indicator lamp if defective. Depress 3 STRIKE RESET switch (39).

TABLE 3-4. CORRECTIVE PROCEDURE FOR ABNORMAL INDICATION (Cont)

ABNORMAL INDICATION	CORRECTIVE PROCEDURE
FIL. ON indicator (58), FIL. READY indicator (17), or PLATE ON indicator (15) does not light	9. Replace indicator lamp if defective.
Automatic high voltage regulation inoperative	10. Place PLATE VOLTAGE CONTROL switch (52) in MANUAL position and use RAISE (54) and LOWER (51) switches to control high voltage outputs. Refer to Section 5 for corrective action.
Circuit breaker motor does not drive to ON position when energizing power supply.	11. Replace fuse F10 (5 amp) on side of circuit breaker CB1 if defective.

SECTION 4

PRINCIPLES OF OPERATION

4-1. OVERALL FUNCTIONAL DESCRIPTION.

4-2. GENERAL.

The high-voltage power supply serves two primary functions in the Loran-C Transmitter; namely, the generation of the high voltages and bias voltages necessary for transmitter operation and the providing of automatic controls necessary for proper operation and safeguarding of the transmitter and its operators. The power supply provides seven outputs, six of which are internally controlled. The remaining output is merely a feedthrough of the input line voltage. The internally controlled outputs consist of three high-voltage outputs, two bias voltage outputs, and one regulated primary voltage output. Refer to table 1-2 for a description of these outputs.

4-3. BLOCK DIAGRAM ANALYSIS.

Figure 4-1 indicates the power flow between major portions of the circuitry of the power supply. The unregulated primary voltage input is applied to the primary voltage meter circuit, blower energizing control circuits, blower interlocks, timing sequence control circuits, and the edge lighting circuit. The blower energizing control circuits energize the internal and external blowers. The internal blowers and the external power amplifier blower have air-vane type interlock switches in their air paths.

During the first 15 seconds of operation of the timing sequence control circuits, filament voltage regulator Z2 and the drive motor of plate voltage regulator Z1 are energized. At this point, filament voltage regulator Z2, through a portion of the timing sequence control circuits, applies regulated half voltage to all filament transformers of the high voltage power supply and transmitter, and the drive motor of plate voltage regulator Z1 drives to its minimum point of travel.

At the end of 15 seconds, full voltage from the filament voltage regulator Z2 is applied to all filament transformers. For the next 300 seconds the control cycle is delayed, thus allowing all the tubes in the system, including the high-voltage rectifier tubes, to warm up to their proper operating temperatures.

After this 300-second warm-up period, the regulated output of filament voltage regulator Z2 is applied to the bias voltage circuits and high-voltage circuits through a portion of the timing sequence control circuits, and the regulated output of the plate voltage regulator Z1 is applied to the high-voltage circuits. At this point, the energized high-voltage and bias voltage circuits apply their outputs. If the power supply is in manual operation, the operational cycle will be completed when the operator manually raises the output high voltage to the required

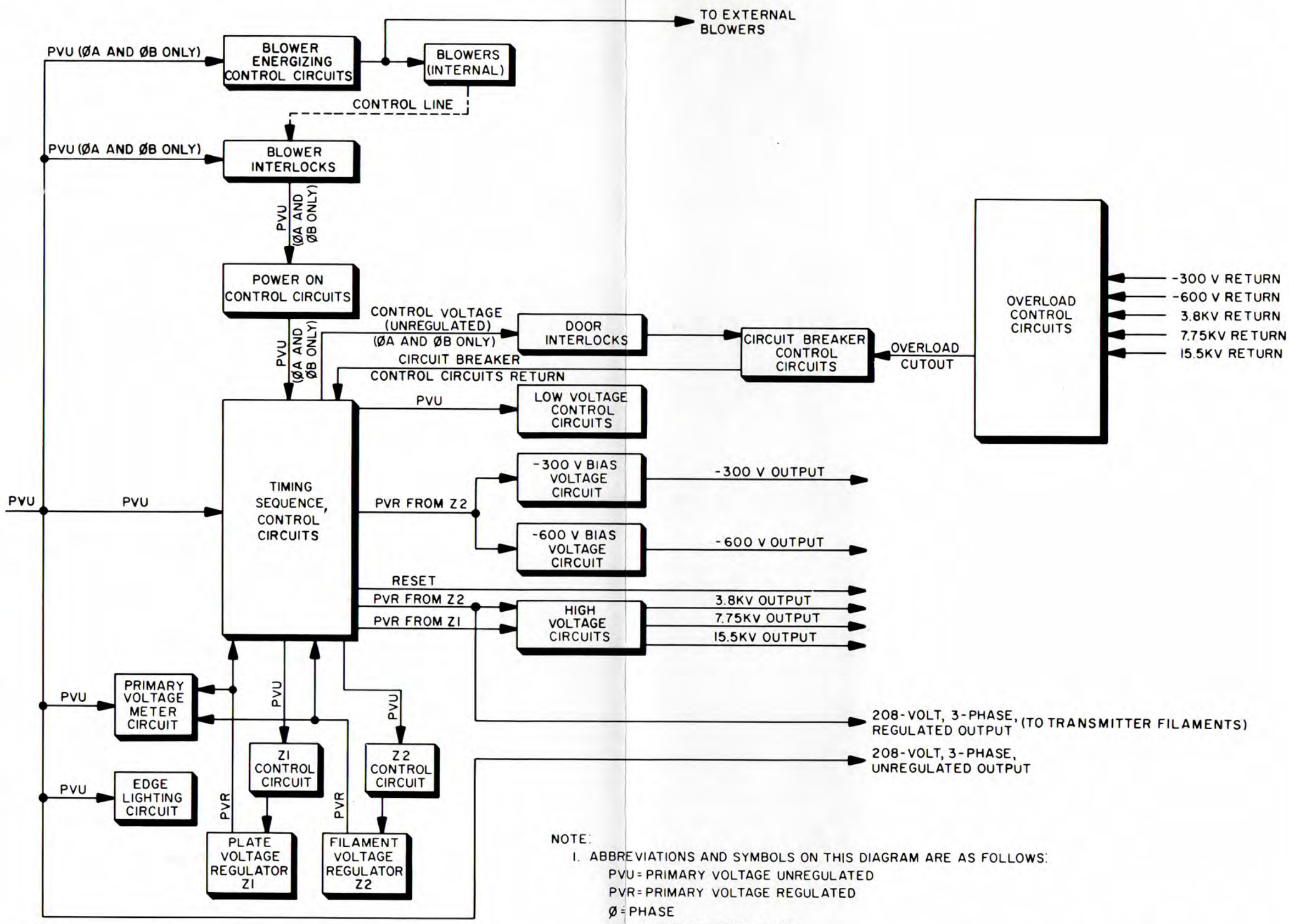

NOTE:

1. ABBREVIATIONS AND SYMBOLS ON THIS DIAGRAM ARE AS FOLLOWS:
   - PVU = PRIMARY VOLTAGE UNREGULATED
   - PVR = PRIMARY VOLTAGE REGULATED
   - Ø = PHASE
   - ——► = ELECTRICAL FLOW
   - - - ► = MECHANICAL FLOW

Figure 4-1. Simplified Overall Functional Block Diagram

level. If the unit is in automatic operation, the plate voltage regulator will automatically raise the high voltage to complete the cycle.

Overloads, low line voltage conditions, or open interlock switches can interrupt and/or shut down the equipment. If any door interlock switch is opened, the circuit breaker control circuits become de-energized, tripping the circuit breaker. If any internal blower interlock switch is opened, the filament energizing control circuits become de-energized, thereby de-energizing the timing sequence control circuits.

The circuitry is so arranged that even though the circuit breaker trips as a result of an overload, the timing sequence control circuits will re-set to close the circuit breaker contacts. This re-setting action can only occur a maximum of three times in any 90-second period. Should an overload be sufficiently intermittent as to allow a total of more than 90 seconds to elapse between any three successive trips of the circuit breaker, recycling will continue indefinitely. If, on the other hand, three successive trips of the circuit breaker occur within a 90-second period, the circuit breaker contacts will be driven to their open positions and remain that way until manually re-set.

A primary voltage meter circuit, capable of measuring independently the individual amplitudes of the line voltage as it comes into the equipment, as it appears at the output of filament voltage regulator Z2, and as it appears at the output of plate voltage regulator Z1, is provided to enable a constant check of line voltage levels within the equipment.

4-4. DETAILED CIRCUIT ANALYSIS.

Paragraphs 4-5 through 4-9 contain detailed descriptions of the functional operation of the circuits of the power supply. Paragraph 4-10 contains a functional description of plate circuit breaker CB1.

4-5. STOP, START, AND AIR COOLING CIRCUITS.

a. GENERAL. - Figure 4-2 is a block diagram showing electrical and mechanical power flow. This diagram should be understood thoroughly before proceeding to the schematic diagram of figure 4-3.

b. CIRCUIT ANALYSIS (figures 4-2 and 4-3). - Phases A and B of the primary line voltage are applied to control transformer T4 whose output of 115 volts at 60 cycles is applied to the stop switches and air switches. The stop switches, when in their normally closed positions, carry the control voltage from T4 to START switch S8 and to one of the normally open contacts of each of the blower relays, K28, K29, K30, and K31.

When the normally open START switch S8 is closed, the control voltage is applied to the actuating coils of blower relays K28 through K31. The actuating coils of relays K28 through K31 then close their contacts. The normally open contacts, shown in parallel with START switch S8, being closed at this point, maintain the flow of control voltage to the relay coils after S8 returns to its normally open position. If either of the normally closed EMERGENCY STOP switches is opened, the flow of control voltage through the closed contacts (N.O.) of relays K28 through K31 is interrupted, thus returning the actuating coils of K28 through K31 to their unenergized positions. In this manner, the normally open contacts of the blower relays, that are in parallel with the START switch, act as holding contacts to keep

the actuating coils energized until the flow of control voltage is interrupted by any one of the EMERGENCY STOP switches.

In addition to those contacts that maintain the flow of control voltage through the actuating coils of the blower relays, each blower relay has a set of normally open contacts which, when closed, apply the line voltage to each of the blowers in the system. With the exception of the Power Amplifier cabinet blower, each blower has a pneumatically-actuated air-vane interlock switch in its air path. When the blowers displace the rated amount of air, the air switches close. The closing of all air switches allows the application of the control voltage to the FIL. VOLTAGE switch (S4). Should any air switch open, the control voltage applied to the FIL. VOLTAGE switch is interrupted, thus shutting down the rest of the equipment.

A normally open contact on K30 and on K31, when closed, maintains flow of control voltage to the remainder of the control relays in the system. (See figure 4-2.)

4-6. VOLTAGE REGULATORS Z1 AND Z2.

a. GENERAL DESCRIPTION. - Power supply line voltage is maintained at a constant level by two induction voltage regulators. Each is similar in design and operation and differ mainly in power-handling capability. Voltage regulator Z1 controls the primary voltage of plate transformer T1 and has a rated output of 110 kilovolt-amperes. Voltage regulator Z2 controls the primary voltage of filament transformers T2 and T3, bias voltage transformers T7 and T8, and filament transformers (used in equipment external to the power supply) at a rated output of 20 kilovolt-amperes.

The induction voltage regulator is an electrical device which maintains voltage within predetermined limits in a three-phase circuit. These regulators can be manually controlled or automatically operated by a regulating relay and a motor-control relay. Each voltage regulator is normally set for automatic operation. However, Z1 can be manually operated by front panel controls on the center cabinet section.

Each voltage regulator has a variable-coupling, three-phase autotransformer which consists of three shunt windings across the input lines and three series windings connected to the output lines. The shunt windings are mounted on a motor-driven rotor, which varies the magnetic coupling to each series stator winding. At a given input voltage, the proximity of the rotor windings to their respective stator windings will determine the output voltage. Actuating the bi-directional control motor will vary the rotor-stator coupling and, consequently, the induced voltage of the stator winding. The output voltage of each phase is equal to the vector summation of its rotor and stator windings; therefore, input voltage changes which appear across the rotor windings may be compensated by repositioning the rotor. The voltage-sensitive regulating relay detects an input voltage variation and determines the direction and amount of correction necessary. The motor-control relay energizes the rotor motor in the direction determined by the regulating relay. Automatic regulation is effected by continuous tracking of input voltage by the regulating relay and initiating rotor positioning necessary to maintain a constant, predetermined output voltage amplitude.

The operating mechanism of the regulator consists of a double worm and gear drive; a capacitor-start motor, and limit switches which determine the amount of travel of the regulator rotor in each direction.

A worm assembled on the motor shaft drives the main worm through a nonmetallic gear keyed to the worm which, in turn, drives the gear keyed to the regulator rotor

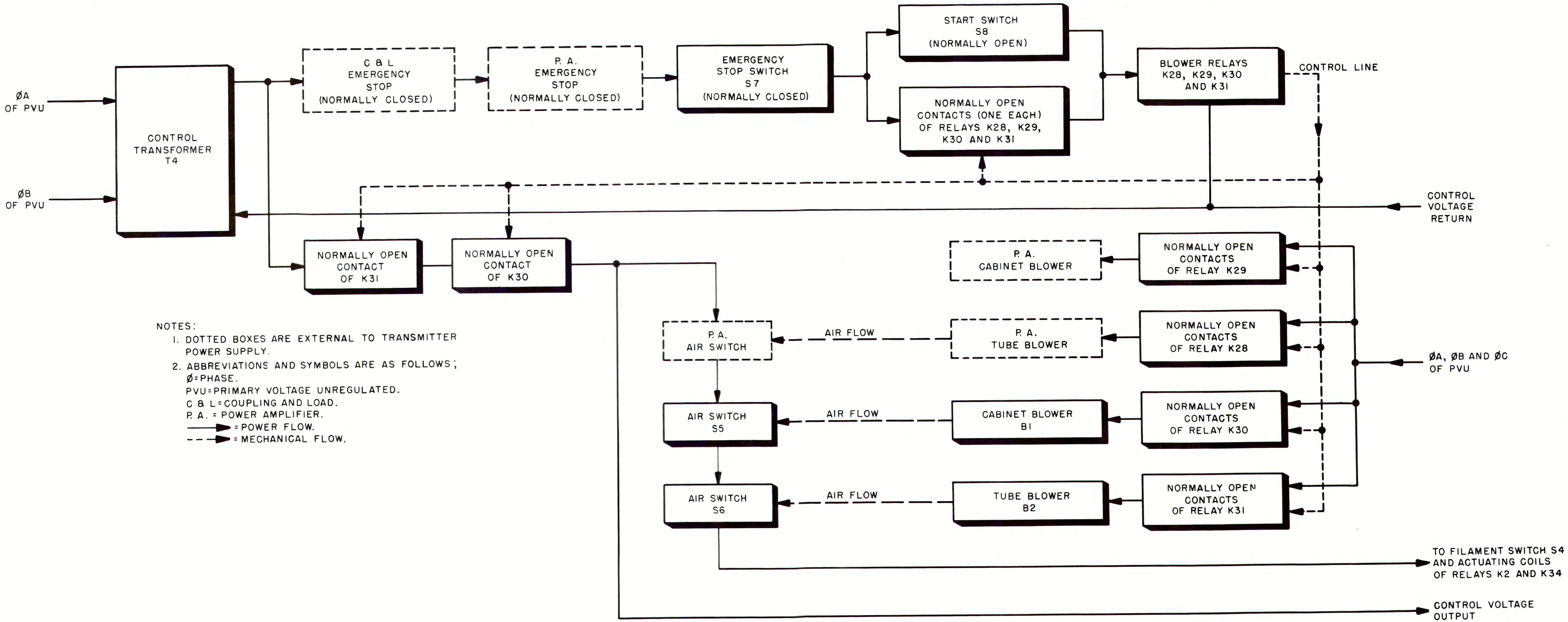

NOTES:

1. DOTTED BOXES ARE EXTERNAL TO TRANSMITTER POWER SUPPLY.
2. ABBREVIATIONS AND SYMBOLS ARE AS FOLLOWS;
   Ø=PHASE.
   PVU=PRIMARY VOLTAGE UNREGULATED.
   C & L=COUPLING AND LOAD.
   P. A. = POWER AMPLIFIER.
   ——▶ = POWER FLOW.
   - - ▶ = MECHANICAL FLOW.

Figure 4-2. Stop, Start, and Air Cooling Circuits, Block Diagram

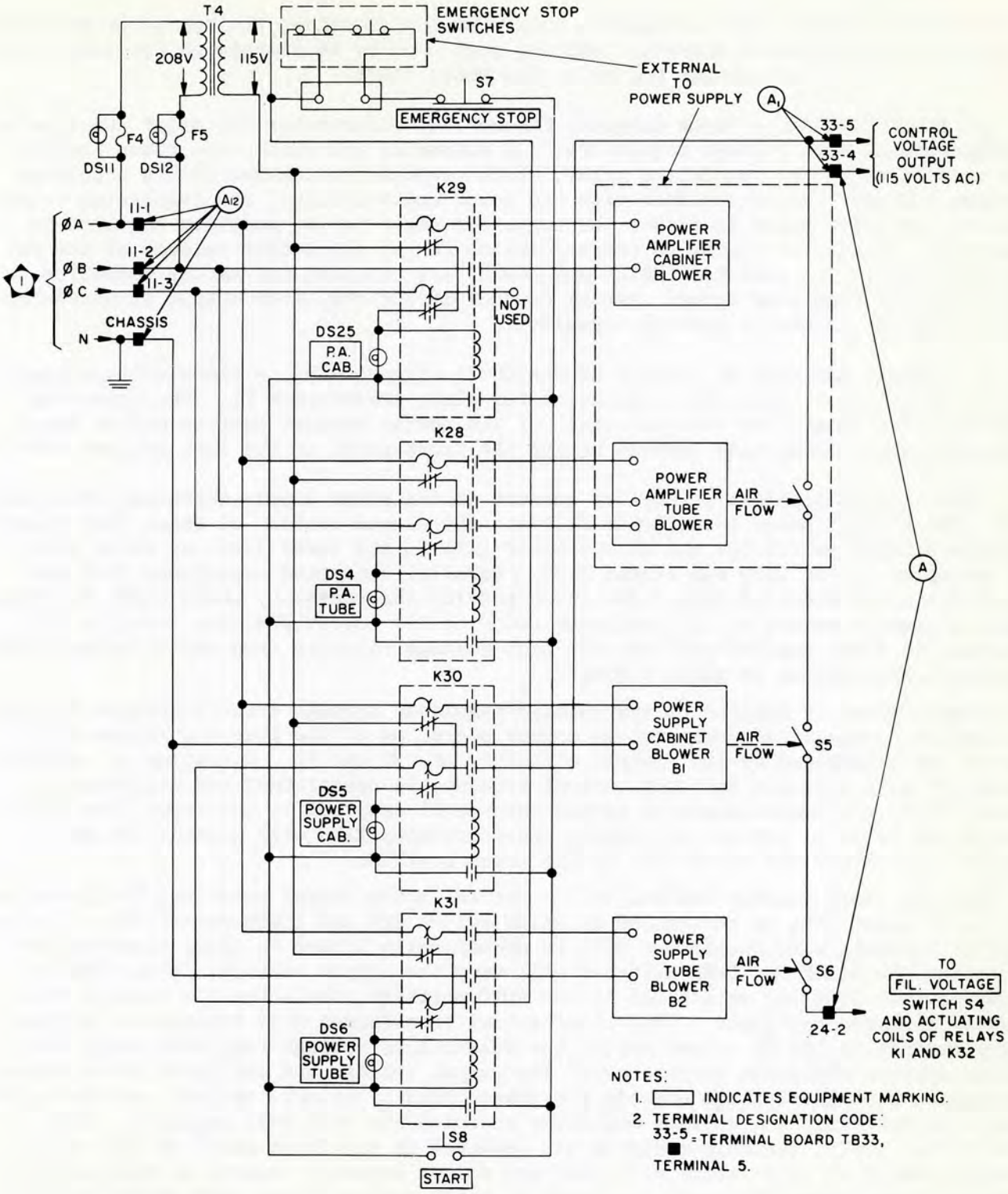

Figure 4-3. Stop, Start, and Air Cooling Circuits, Schematic Diagram

shaft. The regulator rotor and the main worm are equipped with tapered roller bearings and the motor with ball bearings.

The limit switches are arranged to interrupt the travel of the regulator rotor at the maximum and minimum magnetic coupling positions by de-energizing the motor circuit. The tripping cams are bolted to the rotor shaft.

b. BLOCK DIAGRAM. - Block diagram, figure 4-4, illustrates the major functioning components of both voltage regulators. In automatic operation, the rotor position is controlled by the regulating relay, which responds to changes in the regulator output voltage. In conjunction with the motor control relay, the regulating relay causes the drive motor to rotate the regulator rotor to the position required to maintain, within the limits of the regulation range, the output voltage at the required level. Two switches (RAISE and LOWER) are provided for manual operation to position the regulator rotor. Manual control of the regulator output is necessary to adjust the automatic control circuitry.

c. CIRCUIT ANALYSIS OF VOLTAGE REGULATOR Z1 (figure 4-5). - Plate voltage regulator Z1 provides input line regulation for plate transformer T1. The operating controls are located on the front panel of the center cabinet section and on the Z1 control panel, internally located behind the front panel of the left cabinet section.

The initial application of line current to the power supply energizes drive motor Z1B1 through power transformer Z1T4 and the closed contact of relay Z1K3 which bypasses LOWER switch S24 and drives motor Z1B1 to its lower limit at which point a cam opens switch Z1S2 and closes Z1S6. Parallel connected capacitors Z1C1 and Z1C2 are motor starting capacitors which provide the necessary phase shift for Z1B1. This automatic return of the regulator rotor to its lowest position when the line voltage is first applied protects the high voltage circuits from rapid, rather than gradual, application of plate voltage.

Primary power is applied to the voltage regulator through circuit breaker CB1. Application of power is contingent on proper operation of the bias and filament circuits, as determined by the control circuitry of CB1 and Z1. Actuation of control relay K7 will indicate that the control sequence is operational and will energize relay Z1K3, a voltage-sensitive device which will drop out if the input line voltage drops below 30 percent of normal. De-energizing Z1K3 will disable the motor control circuitry and drive Z1B1 to its lower position.

When the PLATE VOLTAGE CONTROL switch S16 is in the MANUAL position, bi-directional drive motor Z1B1 is controlled by RAISE switch S23 and LOWER switch S24. The rotor of variable autotransformer Z1T1 is mechanically linked to Z1B1; therefore depressing the RAISE or LOWER switches will vary the output voltage. With CONTROL POWER switch Z1S3 and switch S16 in the AUTO position, the automatic control circuits of Z1 are energized. Control potential transformer Z1T2 impresses a voltage proportional to the Z1 output across the solenoid of voltage regulator relay Z1K1, which detects amplitude variations of the output voltage and initiates rotor repositioning when the voltage exceeds the preset band. Variable ballast resistors Z1R2 and Z1R3 determine the voltage amplitude at which the unit will regulate. AUTO PLATE VOLT ADJUST variable resistor R40 (mounted on the front panel of the center cabinet section) is in shunt with Z1R2 and allows external control of this circuit. Control transformer Z1T3 supplies power to motor control relay Z1K2 which provides two-directional control of drive motor Z1B1 when Z1K1 detects an output voltage variation of sufficient amplitude to require re-positioning of Z1T1. The actuation of either Z1K2 coil will energize the Z1K1 holding coil. The solenoid actuated contacts of Z1K1 are held in positive contact by the holding coil. The magnitude of

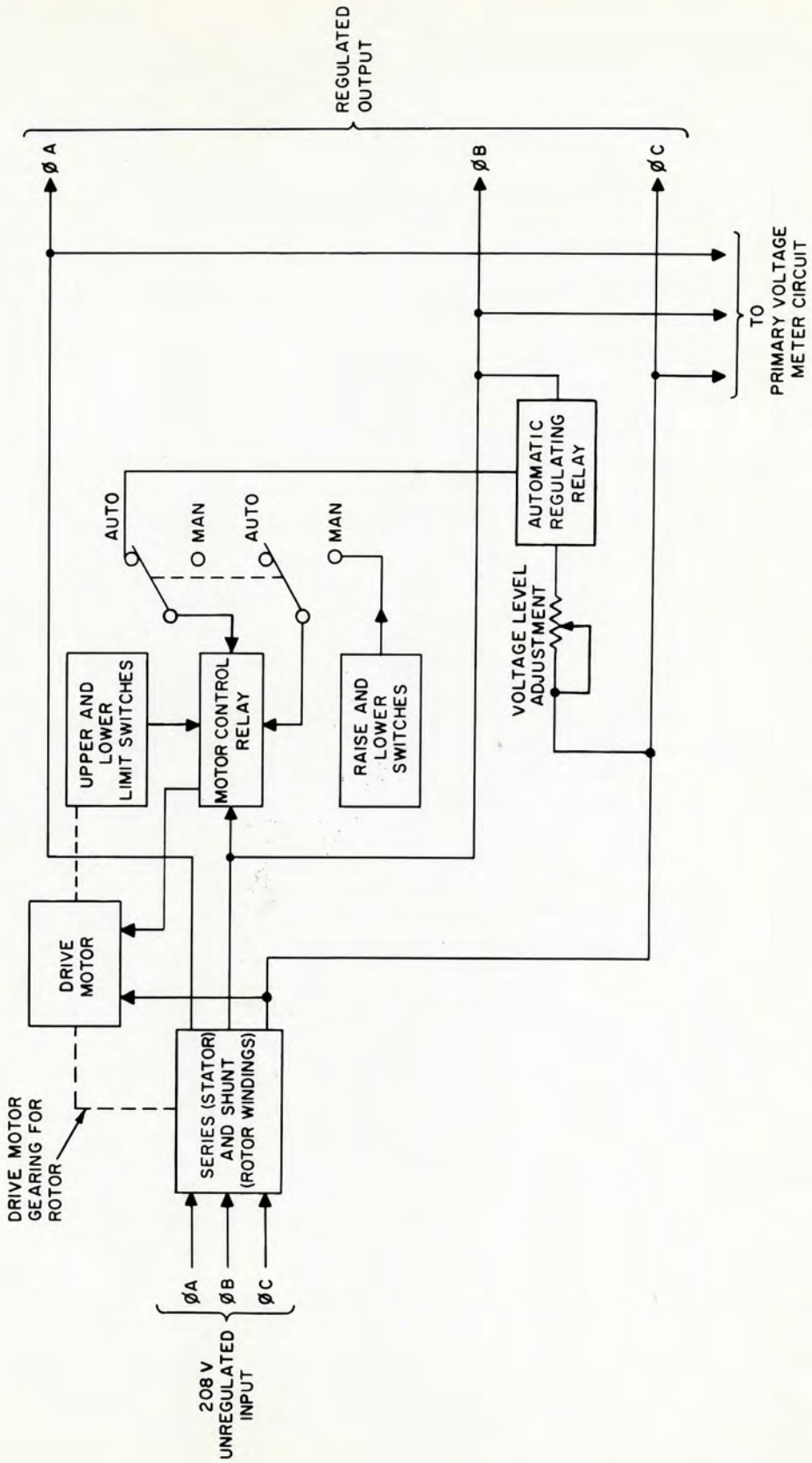

Figure 4-4. Voltage Regulators Z1 and Z2, Block Diagram

Figure 4-4. Voltage Regulators Z1 and Z2, Block Diagram

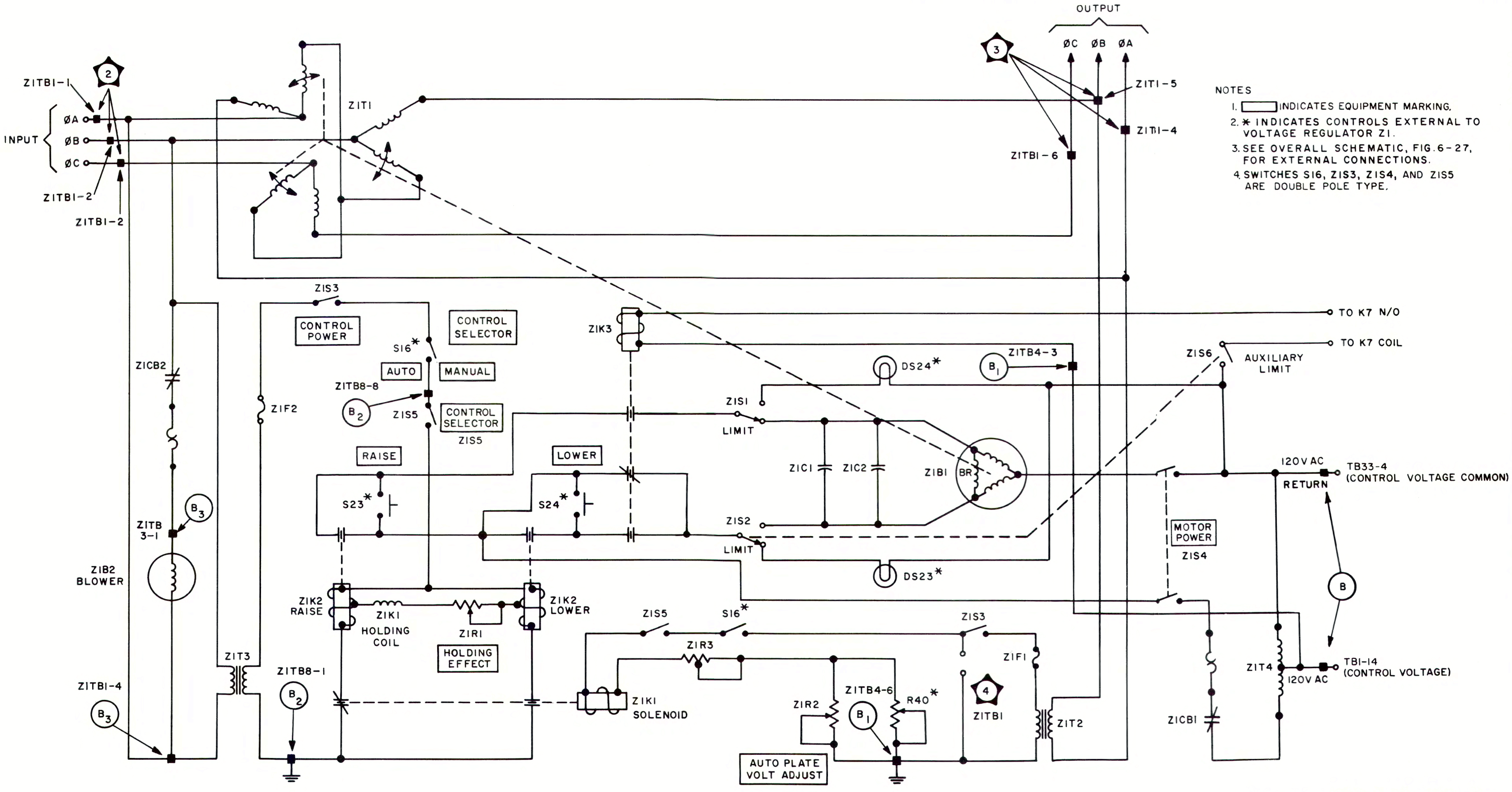

Figure 4-5. Voltage Regulator Z1, Schematic Diagram

the holding coil field is controlled by HOLDING EFFECT variable resistor Z1R1. For detailed analysis of voltage regulator relay, refer to subparagraph e.

Voltage regulator Z1 is forced air cooled by blower motor Z1B2 which is mounted in the regulator. The unit draws air into the bottom and out the top of the regulator. Thermal cutouts Z1CB1 and Z1CB2 are provided to protect the regulator from overheating. The voltage regulator cannot be inadvertently operated without the blower. since the blower circuit and the regulator power circuit are energized simultaneously.

d. CIRCUIT ANALYSIS OF VOLTAGE REGULATOR Z2 (figure 4-6). - Voltage regulator Z2 provides input line regulation for the filament and line circuits. The unit functions in either manual or automatic operation by adjusting the controls on the front panel of Z2 which is located on the left interior side of the center cabinet section of the power supply (figure 6-9). Manual operation is normally used only for testing and adjusting the voltage regulator. The CONTROL SELECTOR switch Z2S5 provides for automatic or manual operation. When the switch is in the MANUAL position, the regulator can be operated to raise or lower the output voltage by means of the manual operation levers of the motor control relay Z2K2. When the switch is in the AUTO position, the controls respond to both the manual operation levers and the regulating relay Z2K1 contacts.

In automatic operation the output voltage is reflected across the solenoid of voltage regulator relay Z2K1 by closing CONTROL POWER switch Z2S4 and CONTROL SELECTOR switch Z2S5. Regulator relay Z2K1 detects amplitude variations of the output voltage and energizes the appropriate coil of motor control relay Z2K2 when the amplitude exceeds the preset limits. (Refer to subparagraph c.) Transformer Z2T3 supplies power to motor control relay Z2K2 which is controlled by the raise and lower contacts of Z2K1 through two operating coils, each consisting of a main winding with a tapped section. The tapped section provides power for the holding coil of Z2K1 when the main winding is energized. The magnitude of the holding coil field is controlled by HOLDING EFFECT variable resistor Z2R1. The operation of the voltage regulator relay Z2K1 is similar to that of Z1K1. (Refer to subparagraph e.)

e. AUTOMATIC VOLTAGE REGULATION OF VOLTAGE REGULATORS Z1 AND Z2 (figure 4-7). - The regulator relay is both a measuring device and a relay. It continuously tracks the electrical output of the voltage regulator and acts as a relay to control the operation of the driving motor on the regulator, thus maintaining the electrical output within the preset band.

The sensitive element of this relay is a solenoid with an iron core suspended on a spring. To measure voltage. for example, the solenoid current must be proportional to the voltage. This condition is obtained by using a ballast with a low-temperature coefficient in series with the solenoid coil, so that substantially constant solenoid current is obtained with a given voltage, and temperature errors are very small.

When the relay is in operation, the pull of the solenoid, which varies with the relay current, and the pull of the compensating spring are balanced against the weight of the solenoid core. The solenoid operates a set of single-pole, double-throw contacts assembled on a pivoted beam. The left-hand contact closes when the output is too high and the right-hand contact closes when the output is too low. This action causes the voltage regulator to operate and correct the output to the predetermined normal value. Thus, if the tension of the compensating spring is increased (looking from the top, turn adjusting nut clockwise), less current will be required to balance the core weight, and the output values at which the "raise" and

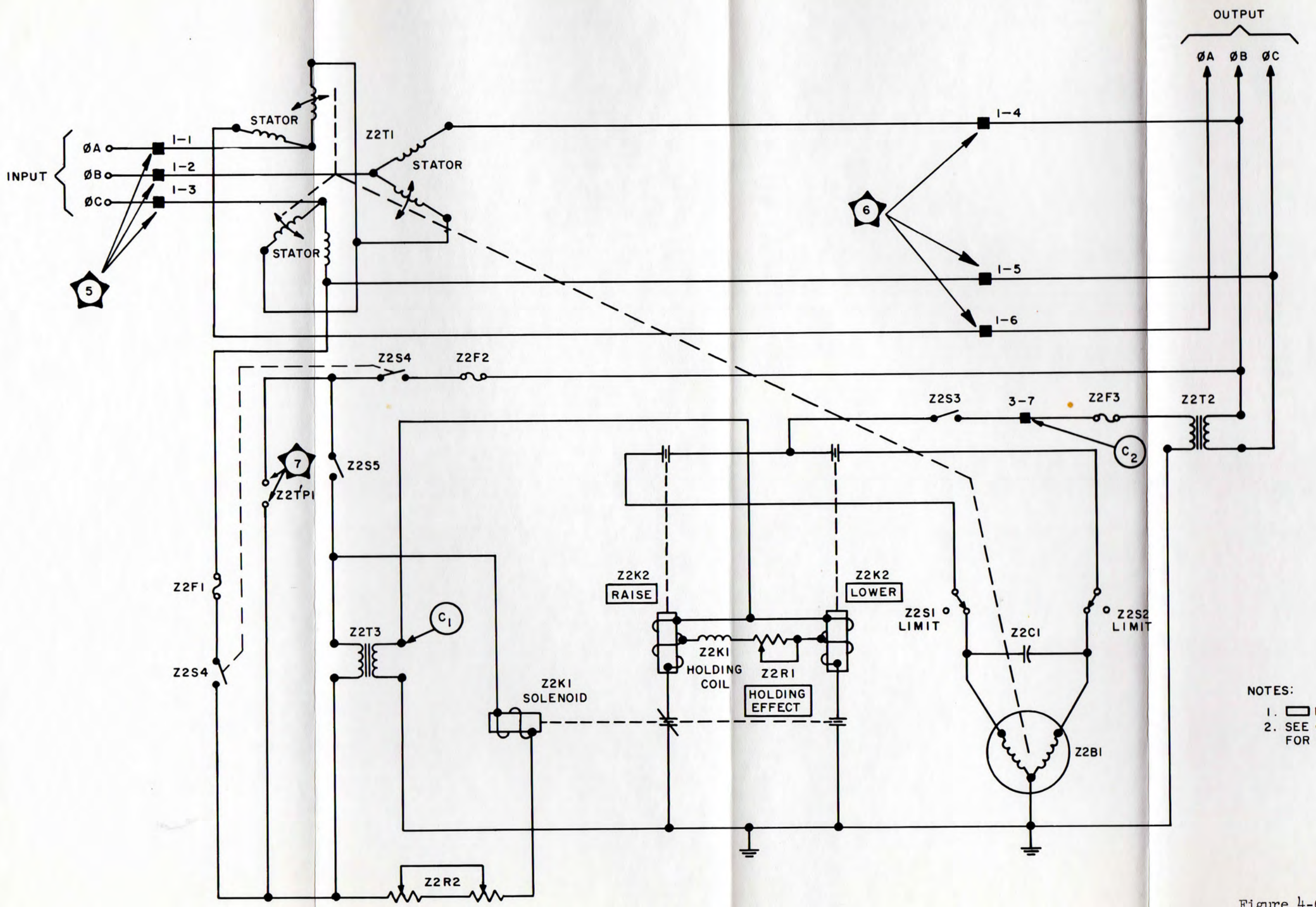

NOTES:

1. ▭ INDICATES EQUIPMENT MARKING.
2. SEE OVERALL SCHEMATIC, FIG. 6-27, FOR EXTERNAL CONNECTIONS.

Figure 4-6. Voltage Regulator Z2, Schematic Diagram

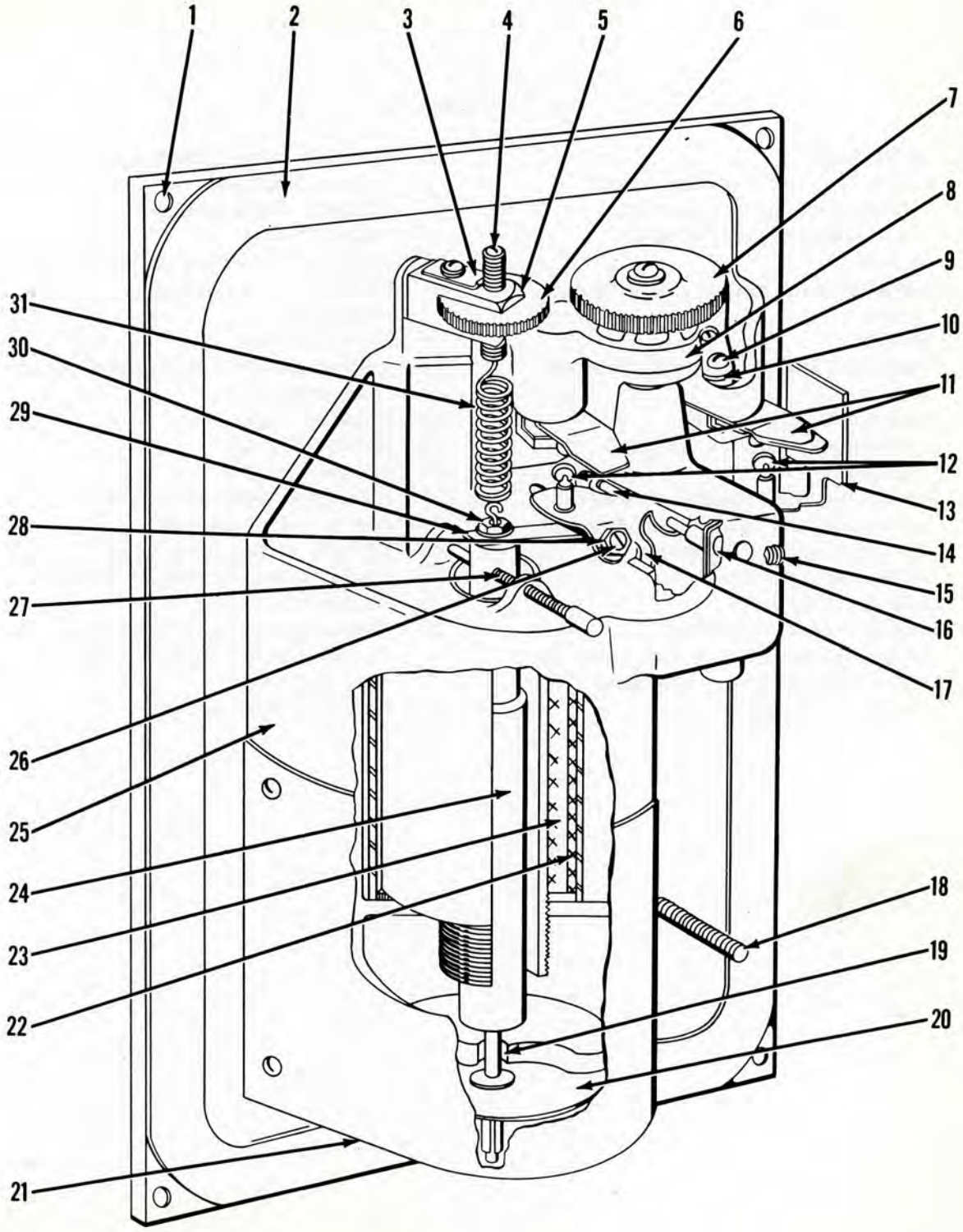

Figure 4-7. Voltage Regulator Relay, Sectional View

Key to figure 4-7

1 Relay base
2 Gasket for protective cover
3 Aligning clamp for compensating spring adjustment screw
4 Compensating spring adjustment screw
5 Bracket
6 Compensating spring adjustment nut
7 Bandwidth adjustment
8 Stationary contact support bracket
9 Screw for stationary contact
10 Connector and locking plate for stationary contact
11 Stationary contacts
12 Movable contacts
13 Contact beam assembly
14 Contact beam rear pivot bearing
15 Setscrew for front and rear pivot bearings
16 Contact beam assembly front pivot bearing
17 Contact beam assembly shunt connector
18 Protective cover mounting stud
19 Solenoid core sapphire guide bearing
20 Damping vane
21 Bottom plate for solenoid case assembly
22 Holding coil
23 Solenoid coil
24 Solenoid core
25 Solenoid case assembly
26 Jewel screw assembly
27 Safety screw (red tip)
28 Jewel screw assembly locknut
29 Coupling spring
30 Coupling spring, clamping screw, and compensating spring eye assembly
31 Compensating spring

"lower" contacts close will both be reduced. Similarly, if the tension of the spring is reduced (turn adjusting nut in a counterclockwise direction), the output values at which the contacts close will both be increased.

The difference in the output voltages or currents at which the "raise" and "lower" contacts close is the bandwidth, which can be adjusted by means of the stationary-contact adjustment. Looking at the top of the relay, the bandwidth is increased by turning the adjusting nut counterclockwise, raising the stationary contacts. Similarly, the bandwidth is decreased by turning the adjusting nut clockwise, lowering the stationary contacts.

A holding coil is wound over the solenoid coil in the opposite direction and is excited through a tapped section of the motor-control relay coils the instant the contacts of the regulating relay close. The holding coil modifies the pull of the solenoid so as to hold the contacts closed until the voltage regulator has corrected the output to nearly the normal value.

The difference in the output voltage or current at which the contacts make and that at which they break is termed "holding effect". Holding effect of both the "raise" and "lower" contacts is adjusted by means of a rheostat on the control panel.

This method of energizing the holding coil from the tapped section of the motor control relay coils and the extremely low current required by the main winding of the motor control relay coils result in a current on the contacts of the regulator relay so small that there is practically no visible arcing at the contacts.

4-7. CONTROL CIRCUITS.

a. GENERAL. - The control circuits contain manual and relay switching provisions to actuate the power supply components in a timed sequence which initially energizes circuits that require a stabilization or pre-heat period, and those which must precede high voltage application. This cycle is semi-automatic; the delay durations are controlled by timing relays. The control circuits monitor the operation of each successive energized circuit and interrupt the cycle in the event of a malfunction.

b. CIRCUIT ANALYSIS (figure 4-8). - When line voltage (208 volts ac, 3 phase) is applied to the power supply, the primary of control transformer T4 is energized by ØA and ØB of the primary line voltage. The 120-volt ac output of T4 is applied through the stop, start, and blower energizing circuits (paragraph 4-5b.) to the remaining control circuits.

With FIL. VOLTAGE switch S4 closed, ELAPSED TIME meter M19 begins operating, filament starting relay K32 is energized, and filament time delay relay K1 is energized into its 15-second cycle. At the start of this 15-second cycle, K32 switches series dropping resistors into the output circuit of voltage regulator Z2, thus maintaining half voltage for the filaments of rectifier tubes V1 through V12 and for the filament circuits in the transmitter.

At the end of 15 seconds, K1 transfers contacts, de-energizing K32 and energizing full filament relay K33 and FIL. ON indicator DS10. This action results in switching out the dropping resistors, thereby applying full filament voltage to the rectifier tubes and the transmitter filament circuits while energizing bias supply variable autotransformers T7 and T8, and starting filament time delay relay K2 into its 300-second cycle. At the end of its 300-second cycle of operation, K2 transfers contacts, lighting FIL. READY indicator DS13, signifying that the filament warm-up period has expired. In addition, if BIAS VOLTAGE switch S2 is closed, bias

relay K34 and its associated BIAS ON indicator DS15 are energized. Note, however, that this latter action will not occur if the B_1-B_2 auxiliary circuit breaker contact is not closed.

With the bias supply energized, voltage loss relays K8 and K9 transfer contacts. (Refer to paragraph 4-8b.) If PLATE VOLTAGE switch S3 and door interlock switch S14 are closed and the LOCAL-REMOTE switch S7 (located on the coupling and load cabinet of the transmitter) which is connected to terminals 9 and 10 of terminal board TB5 is in the local position, relay K7 becomes actuated and subsequently energizes the control circuitry of voltage regulator Z1, plate relay K27, and high voltage grounding relays K25 and K26. Since voltage regulator Z1 travels to its lower limit when primary voltage is first applied, auxiliary limit switch Z1S6 will have transferred contacts, thereby providing the complete energizing circuit for K7. K7 remains energized through its holding contact, even though Z1S6 opens as the output of voltage regulator Z1 is raised. At this point, the power supply is in complete operation.

If an overload occurs, one or more of the normally closed overload relay contacts will open, breaking the circuit for the undervoltage trip coil of circuit breaker CB1 and re-close relay K6. When the contacts of the circuit breaker undervoltage trip coil and the contacts of K6 transfer, 3-strike relay K4 strikes once; the operating motor of CB1, energized through the E reset contacts of CB1, moves the circuit breaker from the "tripped" position to the "open" position and then, by energizing relay K6, to the "closed" position; 90-second reset relay K3 is energized; and the power supply outputs are turned back on. Two additional overloads, successively occurring within 90 seconds of the first overload, will open the closed K4 contact in series with the normally closed overload relay contacts, thereby interrupting the automatic re-setting action of circuit breaker CB1. (Refer to paragraph 4-10.)

However, if the overloads successively occur in a period greater than 90 seconds, sufficient time has elapsed for K3 to transfer contacts, since it is initially energized at the first strike of K4 and remains energized until K4 is re-set. When K3 transfers contacts, the re-set coil of K4 is energized through the normally open contact of K3, returning the 3-strike circuit to its original no-overload condition. If the elapsed time between the successive overloads is less than 90 seconds, the power supply outputs will go off and stay off until 3-strike relay K4 is re-set by depressing 3 STRIKE RESET switch S9.

Low line voltage protection is provided by the action of low line voltage relay K24 and its associated components. Depressing LOW LINE VOLTS RESET switch S11 applies 120 volts ac from the secondary of T4 across the actuating coil of K24, which then transfers contacts. With variable resistor R22 set to approximately 2,200 ohms, and S11 released, the voltage drop across R22 is sufficient to allow K24 to return to its de-energized position if the output of T4 drops by 10 percent or more. When K24 is de-energized, flasher relay K35 operates LOW LINE VOLTS INDICATOR DS31 and, if LOW LINE ALARM switch S12 is in ALARM OPERATIVE position, alarm horn DS48 will sound, indicating a low line voltage condition. The power supply will remain operative, however, until the line voltage drops below 70 percent and de-energizes Z1K3 and the under-voltage trip of CB1.

Each overload indicator relay (K15 through K20) is energized and latched by the closing of its respective overload relay, which is in series with the circuit it serves to protect. An energized overload indicator relay, in turn, removes power from its respective overload indicator (DS16 through DS21). Since each overload indicator relay is a latching type relay, the overload indicator it shuts off will

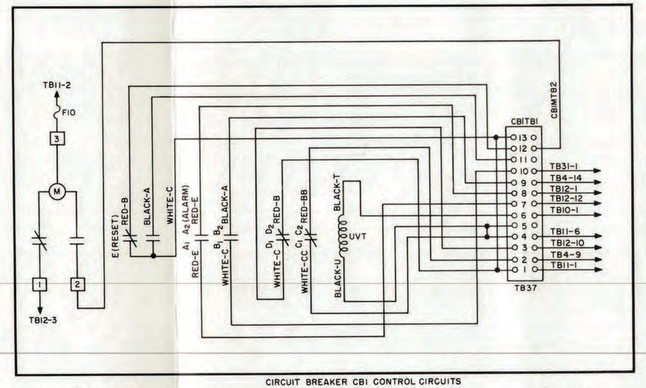

CIRCUIT BREAKER CBI CONTROL CIRCUITS

NOTES:

1. FOR PURPOSES OF DIAGRAM CLARITY RELAY CONTACTS AND COILS ARE IDENTIFIED BY REFERENCE DESIGNATION NOMENCLATURE RATHER THAN GANG LINES.
2. ▭ INDICATES EQUIPMENT MARKING.
3. TERMINAL BOARD DESIGNATION CODE: 33-5 ■ = TERMINAL BOARD TB33, TERMINAL 5.
4. CIRCUIT BREAKER CBI OPERATION:

CONTACT	BREAKER POSITION		
	OPEN	TRIPPED	CLOSED
1 MOTOR OPERATOR SWITCH	CLOSED	CLOSED	OPEN
2 MOTOR OPERATOR SWITCH	OPEN	OPEN	CLOSED
A (ALARM)	OPEN	CLOSED	OPEN
B	OPEN	OPEN	CLOSED
C	CLOSED	CLOSED	OPEN
D	CLOSED	CLOSED	OPEN
E (RESET)	OPEN	CLOSED	OPEN

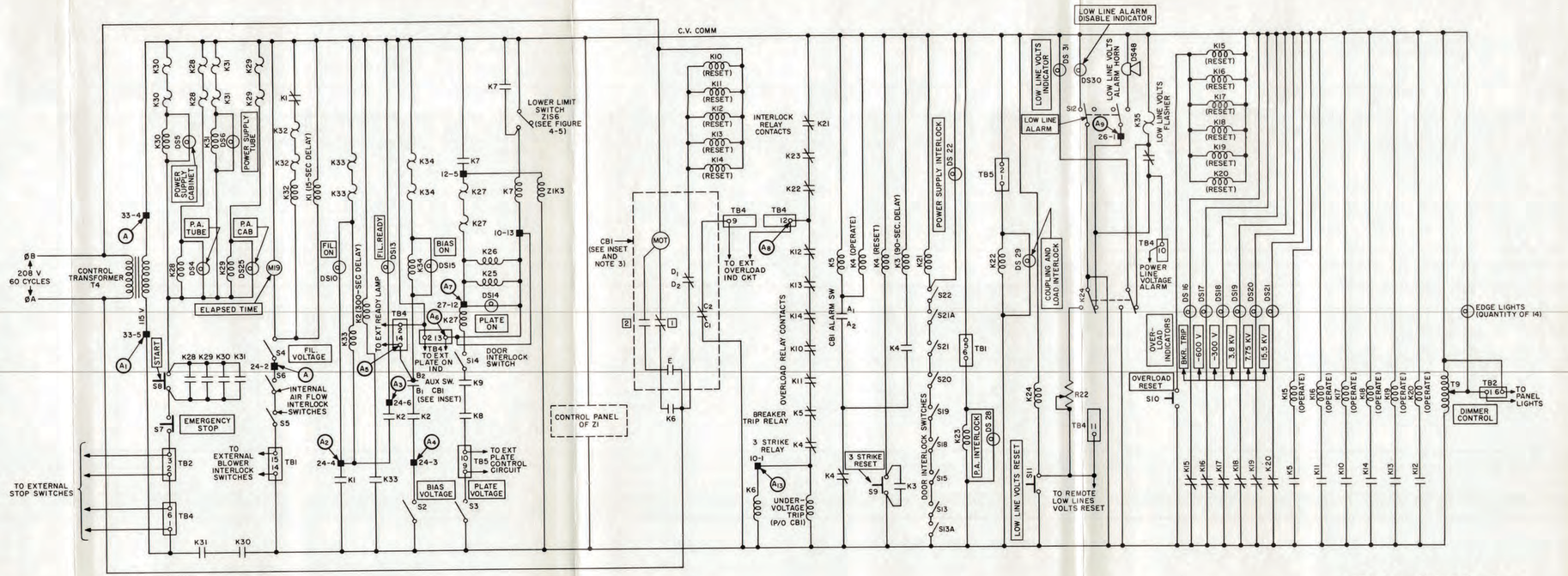

Figure 4-8. Control Circuits, Schematic Diagram

remain off until the overload indicator relay is re-set. Re-setting of the overload indicator relays is accomplished by depressing OVERLOAD RESET switch S10, which energizes simultaneously all the re-set coils of the overload indicator relays.

Variable brightness of the panel edge lighting lamps (DS34 through DS47) is provided by varying the wiper arm of DIMMER CONTROL variable autotransformer T9.

4-8. BIAS VOLTAGE OUTPUT CIRCUITS.

a. GENERAL. - Two bias voltage outputs (-600 volts and -300 volts) are provided by the bias voltage output circuits. Each output is independently variable and contains protective circuits for loss of output as well as overload protection. By means of the front panel controls, -300 BIAS ADJUST and -600 BIAS ADJUST (25 and 26, figure 3-1), the -300 volt supply output may be varied from -240 volts to -360 volts, and the -600 volt supply may be varied from -480 volts to -720 volts. The -300 volt and -600 volt supplies are rated at 200 milliamperes and 750 milliamperes, respectively.

b. CIRCUIT ANALYSIS (figures 4-9 and 4-10). - Upon the completion of the filament warm-up cycle (paragraph 4-7b.), control voltage is applied to the actuating coil of starting relay K34 and BIAS ON indicator DS15. The energizing of K34 closes its normally open contacts. The voltage-regulated output of filament voltage regulator Z2 is applied to those fuses, associated indicators, and variable transformers connected to each bias voltage circuit. Each indicator (DS26, DS32, DS27, and DS33) is connected in parallel with its related fuse.

In the event of the failure of a fuse, its parallel connected BLOWN FUSE INDICATOR will light, as it would no longer be shunted by the negligible resistance of the fuse.

Variable autotransformers T7 and T8 control the level of input voltage to the -300 and -600 volt bias circuits, respectively. Control sequence relay K34 energizes the bias circuit bridge rectifiers SD1 and SD2 through step-up power transformers T5 and T6. Rectifier SD1 is composed of eight silicon diodes each with a shunt resistor. The resistors protect the diodes from line transients with resultant high peak-inverse voltage. (See INSET A, figure 4-10.) Rectifier SD2 is composed of 32 silicon diodes. The higher peak-inverse voltage of the -600 volt circuit necessitates the use of a greater number of diodes even though the power output is less than the -300 volt circuit. (See INSET B, figure 4-10.)

Filter choke L2 in conjunction with resistor R15 reduces the ripple component of the -300 volt output. The -600 volt filter circuit is composed of capacitor C1, chokes L3 and L4, and resistor R16.

Across each of the bias circuit output lines is a voltage loss relay, K8 and K9. The coil current through the relays is critically adjusted by its respective variable series limiting resistor, R13 and R14, to energize at the minimum permissible bias output voltage of each circuit as stated in paragraph 4-8a. A malfunction which causes either of the bias outputs to drop below its minimum operational level will trip its voltage loss relay and interrupt power to the plate circuit by de-energizing relay K7, which causes voltage regulator Z1 to drive to its lower limit and opens the plate relay K27 coil circuit.

An overload relay coil is in series with the return line of each bias circuit. Relay K10 is in the -300 volt circuit and relay K11 is in the -600 volt circuit.

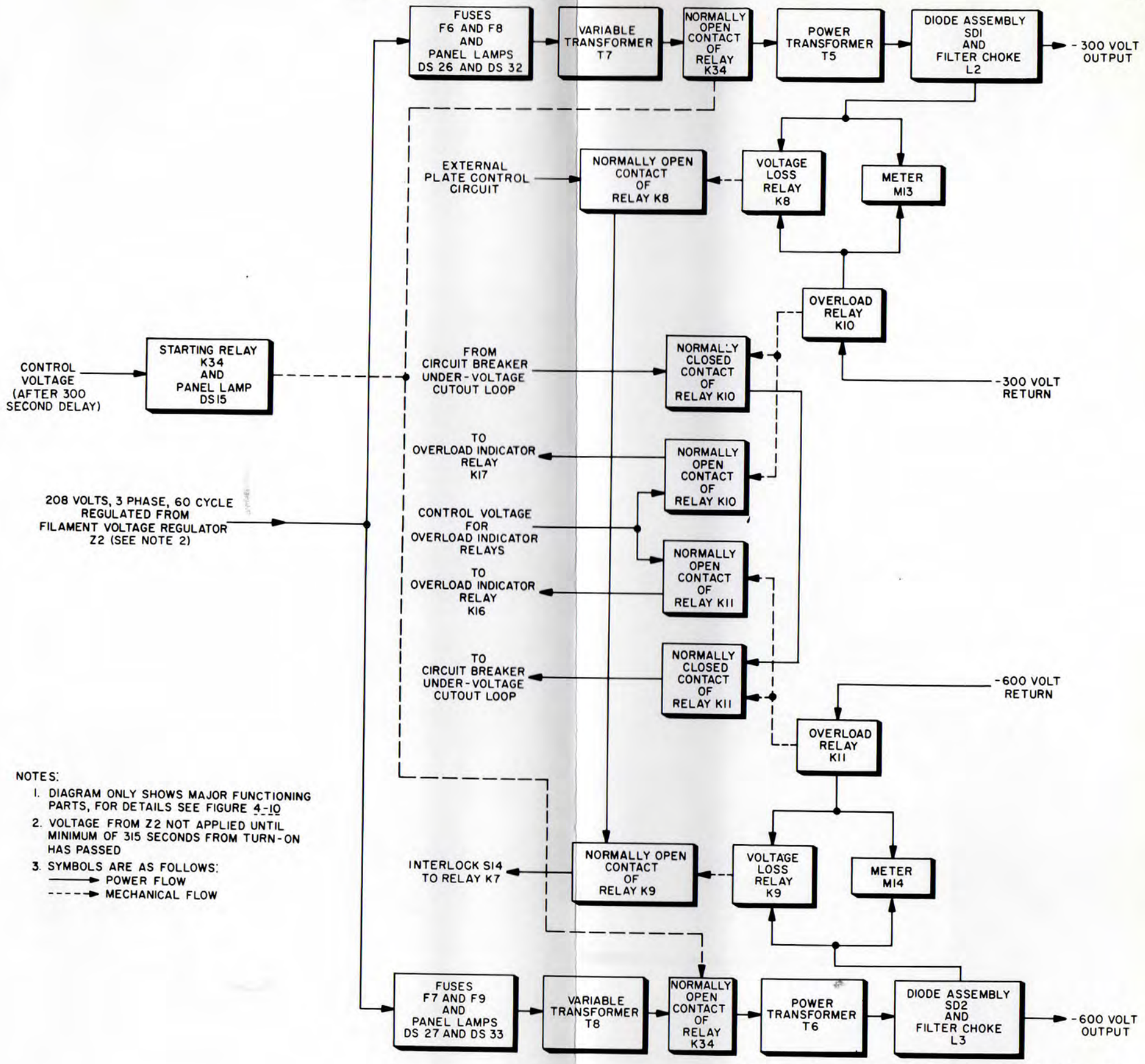

Figure 4-9. Bias Voltage Output Circuits, Block Diagram

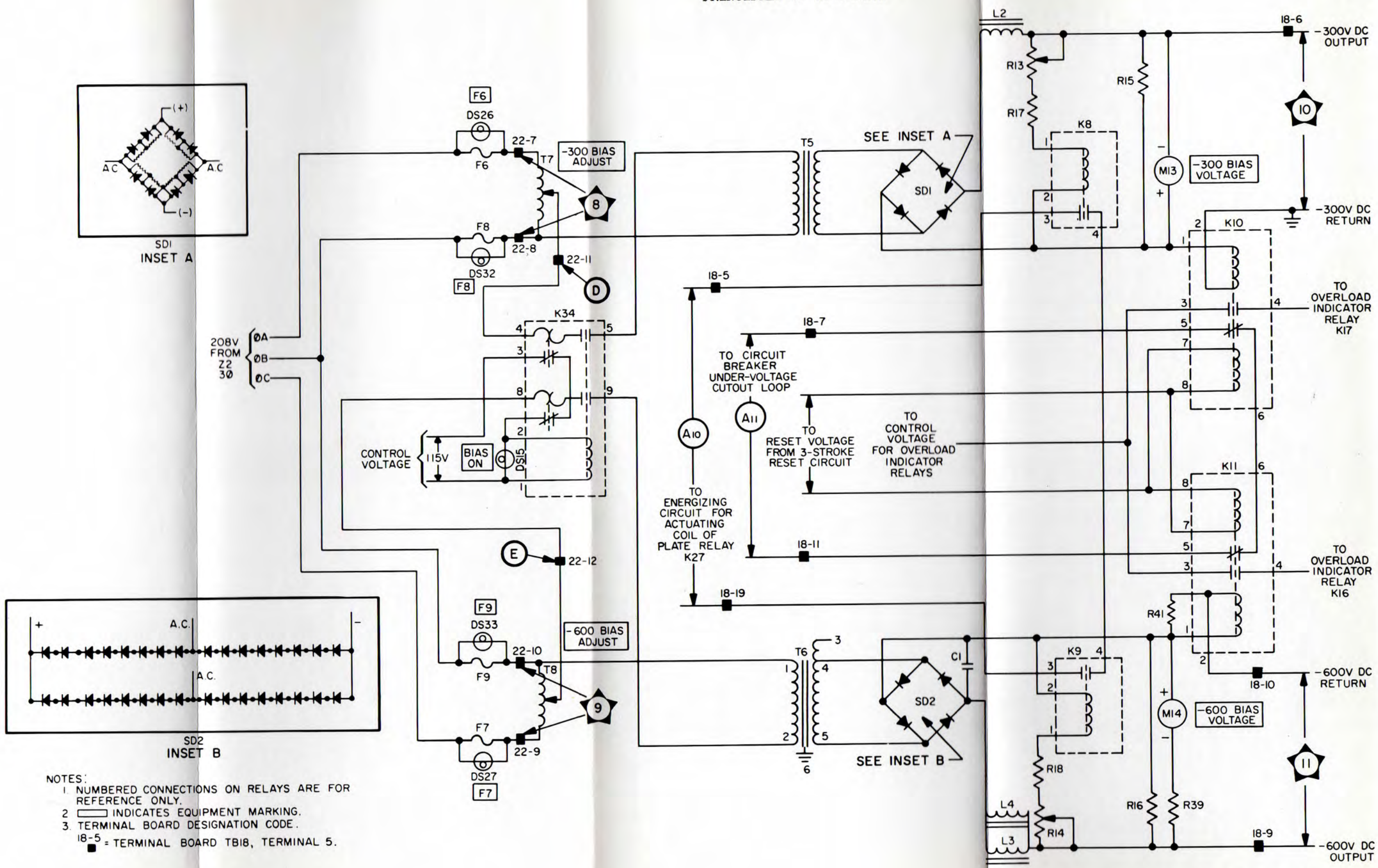

NOTES:
1. NUMBERED CONNECTIONS ON RELAYS ARE FOR REFERENCE ONLY.
2. ▭ INDICATES EQUIPMENT MARKING.
3. TERMINAL BOARD DESIGNATION CODE.
   18-5 ■ = TERMINAL BOARD TB18, TERMINAL 5.

Figure 4-10. Bias Voltage Output Circuits, Schematic Diagram

The overload relays are adjusted to cut out at currents in excess of 10 percent of normal. Resistor R42 prevents relay K11 from tripping from the initial starting current surge, and is shorted one-half second later by relay K37 to provide normal overload protection.

Two voltage monitoring meters (M13 and M14) are connected in parallel with the voltage loss relays (K8 and K9) to maintain a constant check of each bias voltage output.

4-9. HIGH-VOLTAGE RECTIFIER CIRCUIT.

a. GENERAL - The high-voltage rectifier circuit is a three-phase, voltage doubler connection utilizing high vacuum rectifier tubes. It provides regulated dc outputs of 15.5, 7.75, and 3.8 kilovolts maximum. The rectifier tubes are series-connected for each phase, to provide full-wave rectification for the 15.5 and 7.75 kilovolt outputs. The principle advantage of this circuit is that the peak inverse voltage, at any given time, appears across four tubes in series, consequently reducing the possibility of arc-back (reverse conduction) in the rectifiers.

The amplitude of the output voltages is manually adjustable, by operation of voltage regulator Z1 controls (refer to paragraph 4-6a.), to a minimum of approximately one-third of the maximum levels. The amplitudes of the outputs vary simultaneously and in proportion to each other.

Plate transformer T1 is a three-phase to six-phase conversion transformer connected delta to delta-wye. It supplies 6.65 kilovolts, across each secondary leg, to the rectifier tubes V1 through V12.

Filament transformers T2 and T3 each have wye-connected primary windings and six center-tapped 7.5 volt secondaries. They furnish a total of 4.59 kilovolt-amperes to the rectifier filaments.

Overload current protection in the high voltage return line is afforded by relays K12, K13, and K14. Residual high potential is removed from the circuit after shutdown by relays K25 and K26 through appropriate bleeding resistors.

b. CIRCUIT ANALYSIS (figures 4-11 and 4-12). - Initial application of filament voltage to the high-voltage rectifier circuit is approximately half of its operational level. Resistors R4 through R11, in series with the output of voltage regulator Z2, limit the current to the filament transformers T2 and T3 until they are shunted by actuation of the 15 SEC DELAY relay K1. (Refer to paragraph 4-7b.) Full voltage is applied for 300 seconds to allow the filaments to heat before the application of plate voltage. Filament transformer T3 supplies rectifier tubes V1 through V6, and filament transformer T2 supplies rectifier tubes V7 through V12, both transformers having a separate, isolated secondary winding for each filament. Plate transformer T1 converts the regulated, three phase output of voltage regulator Z1 to six phase through its delta-wye wound secondary and steps up the amplitude to 6.65 kilovolts maximum. Voltage is applied to the rectifiers in A-B-C rotation; each with a 60 degree phase relation.

The high voltage rectifier utilizes all twelve of the rectifiers in a voltage doubler connection to develop the 15.5-kilovolt dc output. The output wave shape and ripple factor for this output voltage are identical to that of a twelve phase rectifier. The ripple frequency is 720 commutations per second, which results in a relatively stable direct current and eliminates the need for an output filter with its inherent power consumption.

The 7.75-kilovolt dc output is developed by rectifiers V7 through V12 in a three phase, full-wave connection to the wye secondary of T2. The ripple frequency of the output voltage is 6 commutations per cycle or 360 per second.

The 3.8-kilovolt dc output is half-wave rectified in the circuit of V10 through V12 and the wye secondary of T2. A filter choke (L1) is employed to reduce the effects of the relatively high ripple factor appearing at the center connection N of the wye winding. The ripple frequency is 180 commutations per second.

Consider the operation of the high voltage rectifier at a given point in time (T_o). The voltage-phase-time relationships are illustrated in figure 4-12. Rectifiers V9 and V11 are conducting to develop the 7.75- and 3.8-kilovolt outputs of the wye-section full-wave rectifier. The total voltage of this circuit is effectively added to that developed through the conduction of rectifiers V3 and V4 to provide the 15.5-kilovolt output. (Refer to table 4-1.)

Rectifier meters M1 through M12 indicate the individual plate currents of rectifier tubes V1 through V12. Each, with its associated meter shunt (R24 through R35), has a range of 0 to 5 amperes. The sum of the meter readings M7 through M9 is equal to the total current drawn by the 7.75- and 15.5-kilovolt output circuits. The sum of the meter readings M10 through M12 is equal to the total current drawn by all three high voltage outputs combined.

Voltmeters M15 through M17 indicate the dc level of the high voltage outputs.

Two grounding relays (K25 and K26) are provided to ground the residual high-voltage potential during equipment shutdown. Grounding relay K25 possesses two normally closed contacts, one connected across the 15.5-kilovolt output and the other across the 3.8-kilovolt output. Grounding relay K26 has one normally closed contact connected across the 7.75-kilovolt output. All the contacts of the grounding relays have one or more current-limiting resistors in series to protect the contact points. In normal operation, the actuating coil of each grounding relay is energized simultaneously at the instant of application of the output of Z1 through the contacts of plate relay K27, thus opening the grounding circuits.

Overload protection is provided by overload relays K12 through K14, one being used for each high-voltage output. Each overload relay is connected in series with

TABLE 4-1. OPERATING CONDITIONS OF RECTIFIER TUBES V1 THROUGH V12 AT TIME T_o

RECTIFIER	TRANSFORMER PHASE	VOLTAGE POLARITY	TUBE CONDITION
V1	C	Positive	Conducting
V2	B	Negative	Cut-off
V3	A	0	Quiescent
V4	C	Positive	Cut-off
V5	B	Negative	Conducting
V6	A	0	Quiescent
V7	YC	0	Quiescent
V8	YB	Negative	Cut-off
V9	YA	Positive	Conducting
V10	YC	0	Quiescent
V11	YB	Negative	Conducting
V12	YA	Positive	Cut-off

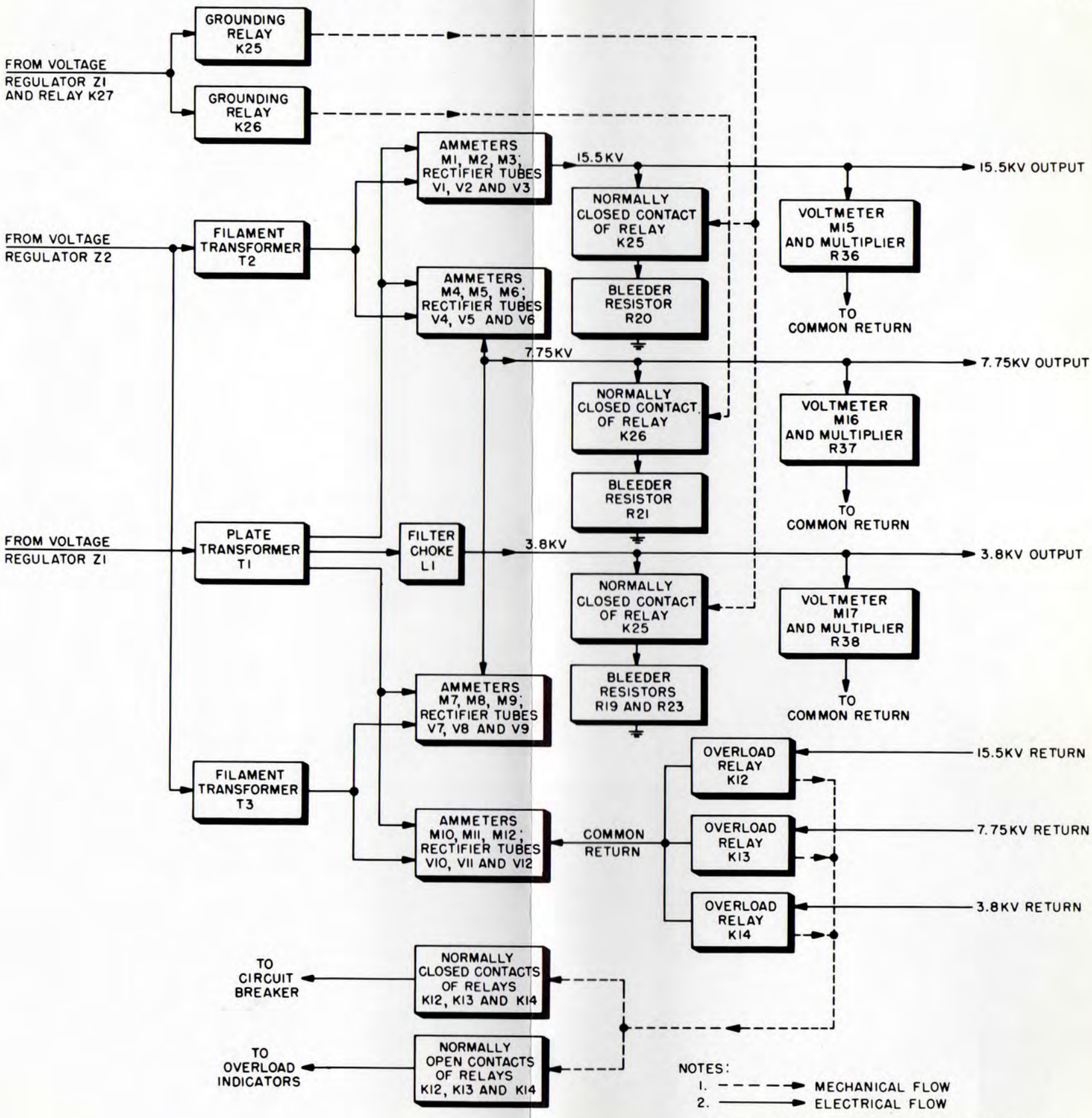

Figure 4-11. High-Voltage Output Circuits, Block Diagram

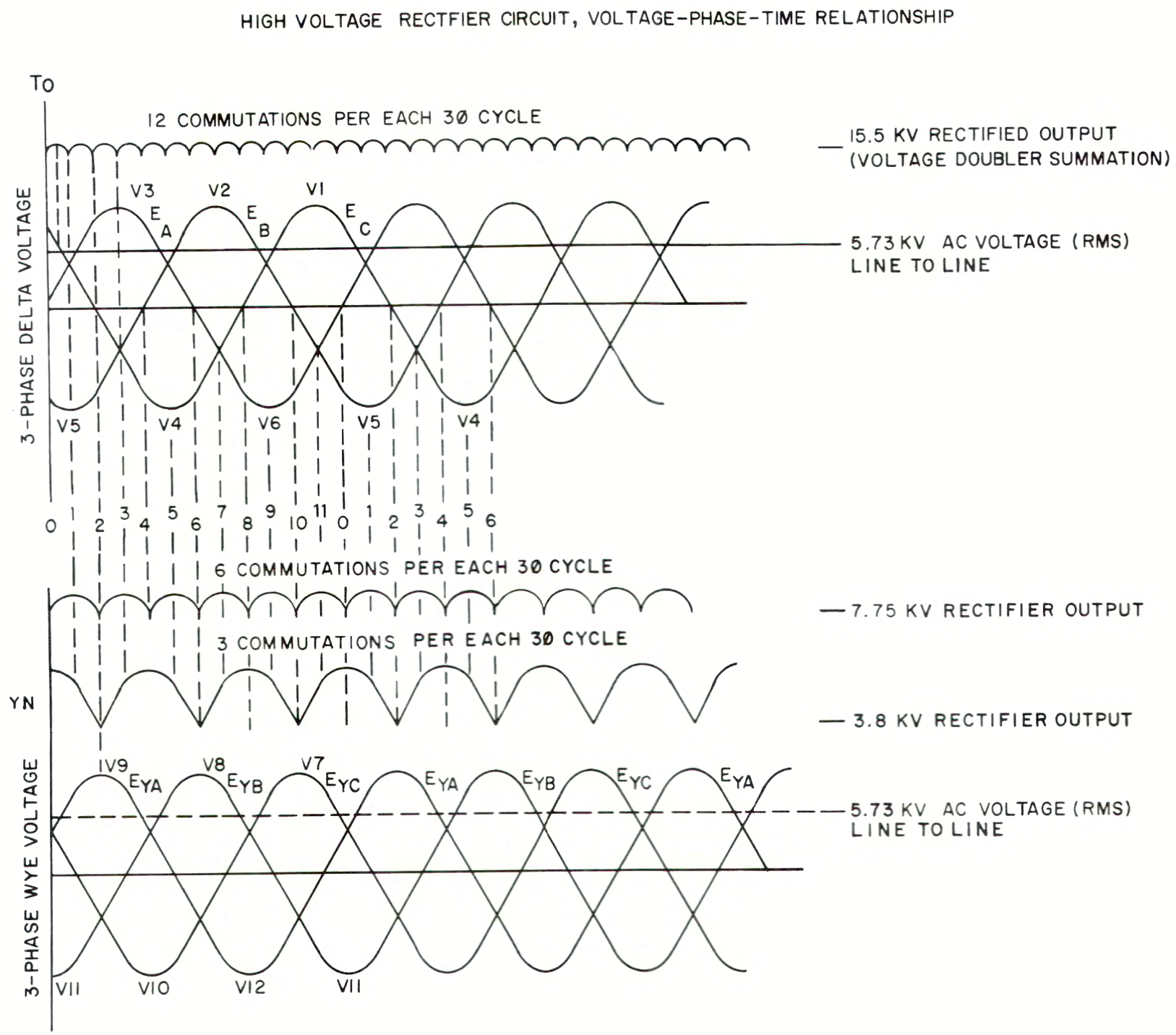

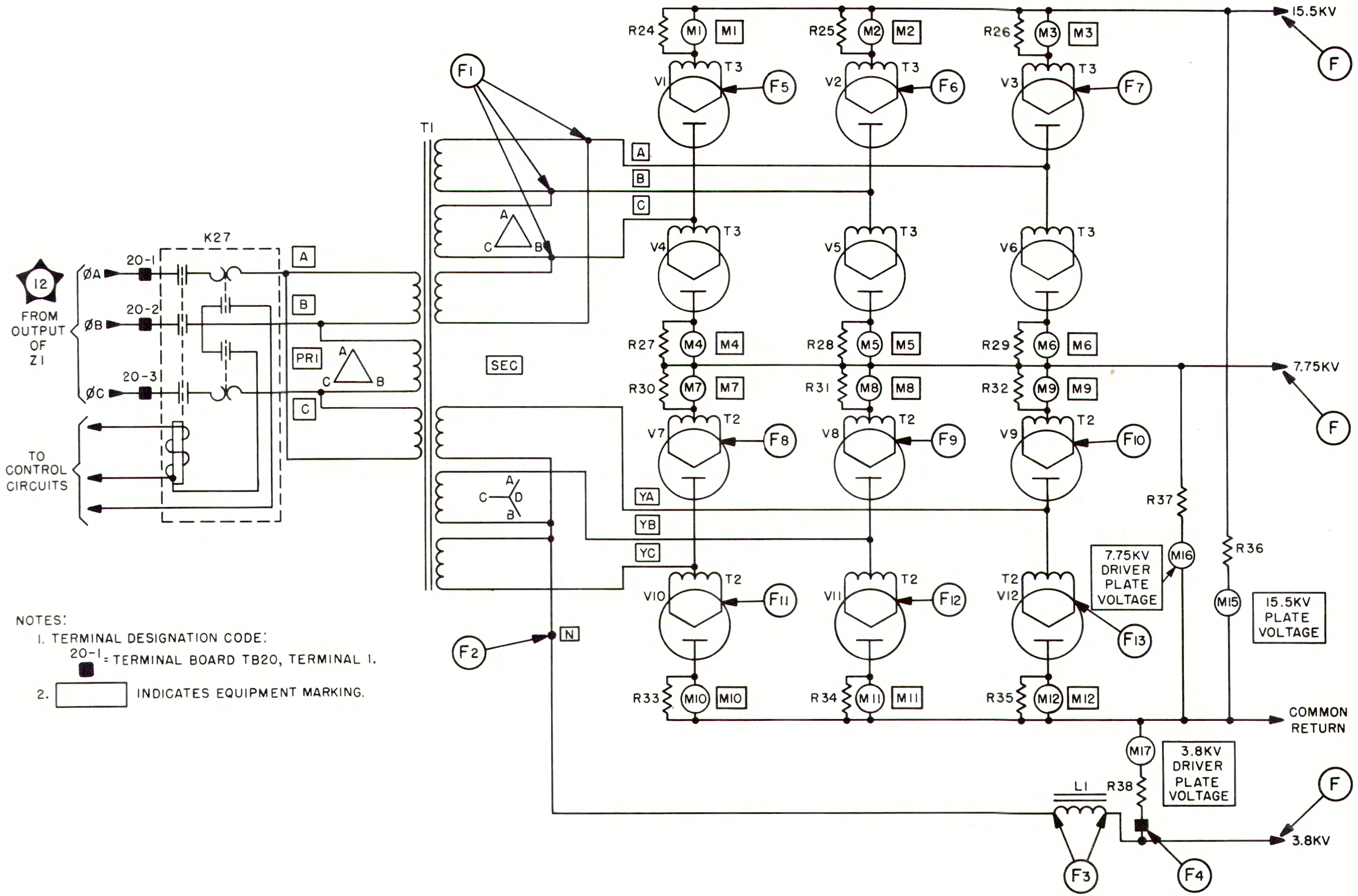

NOTES:
1. TERMINAL DESIGNATION CODE:
20-1 = TERMINAL BOARD TB20, TERMINAL 1.
2. INDICATES EQUIPMENT MARKING.

Figure 4-12. High-Voltage Rectifier Circuits, Schematic Diagram

the return line of its associated high-voltage output. Each overload relay possesses one normally open contact and one normally closed contact. The normally closed contacts of the overload relays are connected in series with each other as well as the circuit breaker undervoltage cutout loop. One side of each of the normally open contacts of the overload relays is connected to the 120-volt control voltage. The other side of each normally open contact of the overload relays is connected to a different overload indicator relay operating coil. When current in excess of that permissible for a particular high-voltage output passes through its respective overload relay actuating coil, the now energized overload relay transfers contacts, thereby closing its normally open contact and opening its normally closed contact. The opening of any of the normally closed contacts of the overload relays breaks the circuit breaker undervoltage cutout loop, thereby tripping circuit breaker CB1. At the same time, the closing of the associated normally open contact applies control voltage to the particular overload indicator relay operating coil used to indicate an overload in a particular high-voltage output circuit. (Refer to paragraph 4-7.)

4-10. PLATE CIRCUIT BREAKER CB1 (figure 4-8).

a. GENERAL. - Plate circuit breaker CB1 is a motor-operated, three-pole, 600-volt ac, 350-ampere circuit breaker equipped with both overload and undervoltage trip devices. The circuit breaker will be opened by a magnetic trip in the presence of any overload surge currents, or by a thermal trip in the presence of any continuous overload currents. The circuit breaker consists of (1) a 208-volt, 60-cps, single-phase motor operator mechanism with automatic reset, (2) an undervoltage trip coil set to trip the circuit breaker when voltage falls 30 percent below nominal value, and (3) an alarm switch and three auxiliary switches, two of which are normally closed and one normally open when the circuit breaker is open.

b. OPERATION. - To understand the operation of the circuit breaker consider the circuit breaker as initially closed. When the circuit breaker is tripped (because of the magnetic trip, thermal trip, or the undervoltage trip coil becoming de-energized), the contacts of the circuit breaker open immediately, the alarm switch closes, and the reset switch of the motor operator closes, applying single-phase power to the circuit breaker motor. The motor then drives the motor operator switch to the open position where the motor operator reset switch and the alarm switch open. When the motor operator switch is in the open position, power to the motor is interrupted and the circuit breaker remains in the open position until the reclose relay K6 is energized. When relay K6 is energized, the normally open contact closes, applying power to the circuit breaker motor. The motor then causes the circuit breaker contacts to close and drives the motor operator switch to the close position, interrupting the power to the motor. The circuit breaker will then remain closed until the circuit breaker is again tripped, causing the above operation to repeat.

c. The undervoltage trip coil of circuit breaker CB1 will be de-energized by any of the following conditions:

The three strike relay K4 receives three impulses within 90 seconds and the normally closed contact of the relay opens.

The breaker trip relay K5 is energized and the normally closed contact of the relay opens.

The 15.5-kilovolt overload relay K12 is energized and the normally closed contact of the relay opens.

The 7.75-kilovolt overload relay K13 is energized and the normally closed contact of the relay opens.

The 3.8-kilovolt overload relay K14 is energized and the normally closed contact of the relay opens.

The -600-volt overload relay K11 is energized and the normally closed contact of the relay opens.

The -300-volt overload relay K10 is energized and the normally closed contact of the relay opens.

The coupling and load interlock relay K22 is de-energized and the normally open contact of the relay opens.

The power amplifier interlock relay K23 is de-energized and the normally open contact of the relay opens.

The power supply interlock relay K21 is de-energized and the normally open contact of the relay opens.

When the undervoltage trip coil of circuit breaker CB1 has been de-energized, it remains de-energized until the causing condition has been corrected, at which time both the trip coil and the re-close relay K6 are again energized.

SECTION 5

TROUBLE-SHOOTING

5-1. GENERAL.

Functional circuit defects can be localized to a specific section by performing both the manual and automatic sequences of operation as specified in tables 3-2 and 3-3. Any defect will result in a deviation from the normal indication shown, thus revealing the area in which the defect exists. Reference to the corrective procedures listed in table 3-4 will indicate the remedial action to be taken to eliminate a defect. The trouble-shooting procedures contained in this section are concerned with the identification of specific defects existing within a functional circuit section to which the defect has been localized.

5-2. TEST EQUIPMENT AND SPECIAL TOOLS.

No special tools or test equipment are required for trouble-shooting the power supply. A multimeter, AN/USM-162, or equivalent, is suitable to perform all tests in this procedure.

5-3. OVERALL TROUBLE-SHOOTING.

Locate the defective functional circuit by using tables 3-2 and 3-3 and observing any deviation from the normal indications called for in each operating step. Then trouble-shoot the defective functional circuit in accordance with the instructions in the following paragraphs. Use of figures 6-28, 6-29, 6-30, 6-31, and 6-32 during trouble-shooting will facilitate location of the defect involved.

5-4. STOP, START, AND AIR COOLING CIRCUITS, TROUBLE-SHOOTING.

Refer to table 5-1 and trouble-shoot the stop, start, and air cooling circuits in accordance with the indicated instructions.

5-5. VOLTAGE REGULATOR Z1, TROUBLE-SHOOTING.

Refer to table 5-2 and trouble-shoot Z1 in accordance with the indicated instructions.

5-6. VOLTAGE REGULATOR Z2, TROUBLE-SHOOTING.

Refer to table 5-3 and trouble-shoot Z2 in accordance with the indicated instructions. See figure 5-1 if circuit breaker CB1 is to be manually operated or if the motor operator fuse needs replacement. If motor operator of CB1 needs replacement, refer to paragraph 6-14 of REPAIR section for instructions on mounting the motor operator.

TABLE 5-1. POWER SUPPLY PP-2540/FPN-42, STOP, START, AND AIR COOLING CIRCUITS, FUNCTIONAL SECTION TROUBLE-SHOOTING CHART

STEP	TEST POINT	PRELIMINARY ACTION	NORMAL INDICATION	NEXT STEP
1	1 Figure 4-8	Switch multimeter to 250 Vac range, connect test prod alternately to terminals 1, 2, and 3 of TB35, connect common lead to chassis, perform steps 1 and 2 of table 3-2, and measure each incoming phase (ØA, ØB, ØC).	Meter reads 120 ±10% Vac in each phase.	If indication is normal, proceed to next step. If indication is below normal, or absent, check primary voltage source. If indication is below normal, check line current with multimeter. With power supply fully energized, line current shall not exceed 300 amperes.
2	A Figure 4-8	With multimeter on 250 Vac range, connect test prod to TB24, terminal 2, and ground to TB33, terminal 4.	Meter reads 120 ±10% Vac and indicators DS11 and DS12 do not glow.	If indicator or indicators glow, check F4 and F5 (figure 6-12). Check relays K28, K29, K30, and K31. Repair if necessary. Refer to paragraph 6-11. If indication is absent, check S6, figure 6-11 and S5, figure 6-7. If air switches check out, short terminals 14 and 15 of TB1 and re-measure at A. If indication is still absent, proceed with next step.
3	A_1 Figure 4-8	Connect multimeter to TB33, terminals 4 and 5.	Meter reads 120 ±10% Vac and indicators DS11 and DS12 do not glow.	If indication is absent, check T4. Replace if necessary.

TABLE 5-2. POWER SUPPLY PP-2540/FPN-42, VOLTAGE REGULATOR Z1, FUNCTIONAL SECTION TROUBLE-SHOOTING CHART

STEP	TEST POINT	PRELIMINARY ACTION	NORMAL INDICATION	NEXT STEP
1	2 Figure 4-5	Using terminals 1, 2, and 3 of Z1TB1, measure, with multimeter, the input voltage of each phase (ØA, ØB, and ØC), after performing operating steps 1 through 7 of table 3-2.	Meter reads 208 ±10% Vac in each phase.	If indication is abnormal, check that circuit breaker CB1 (figure 6-7) is closed. (Refer to table 5-4.)
2	3 Figure 4-5	Using terminals 4, 5, and 6 of Z1TB1, measure, with multimeter, the output voltage of each phase (ØA, ØB, and ØC).	Meter reads 100 ±2% Vac in each phase.	If indication is normal, proceed to step 3. If indication is abnormal, proceed to step 5.
3		With PLATE VOLTAGE CONTROL switch S16 (52, figure 3-1) in MANUAL position, depress RAISE switch S23 (54) for a few seconds, leaving multimeter connected as in step 2, above.	Meter reading rises equally in each phase.	If indication is normal, proceed to step 4. If indication is abnormal, proceed to step 5.
4		With PLATE VOLTAGE CONTROL switch S16 (52, figure 3-1) in AUTO position, rotate AUTO PLATE VOLT ADJUST control R40 (53) clockwise, leaving multimeter connected as in step 2, above.	Meter reading rises equally in each phase.	If indication is abnormal, check adjustments. (Refer to paragraph 6-6.)
5	B Figure 4-5	Connect multimeter to terminals 5 and 6 of Z1TB3.	Meter reads 120 ±10% Vac.	If indication is abnormal, check T4 (figure 6-9), Z1T4 (figure 6-6) and Z1B1 (figure 6-7). If indication is normal, proceed to step 7.
6		Alternately depress and release RAISE and LOWER switches S23 and S24 on control panel (54 and 51, figure 3-1)	Drive motor runs in each direction.	If indication is abnormal, check Z1T4, Z1CB1, Z1C1, Z1C2, Z1K2, Z1K3, Z1S1, Z1S2, and Z1S4 (figures 6-6, 6-7, and 6-8).

TABLE 5-2. POWER SUPPLY PP-2540/FPN-42, VOLTAGE REGULATOR Z1, FUNCTIONAL SECTION TROUBLE-SHOOTING CHART (Cont)

STEP	TEST POINT	PRELIMINARY ACTION	NORMAL INDICATION	NEXT STEP
6 (Cont)				If indication is normal, proceed to step 7.
7	B_1 Figure 4-5	Connect multimeter to terminals 3 and 6 of Z1TB4.	Meter reads 110 ±2% Vac.	If indication is normal, proceed to next step. If indication is abnormal, check Z1T2.
8	4 Figures 4-5 and 4-8	Connect multimeter to VOLTMETER terminal Z1TP-1.	Meter reads 110 ±2% Vac.	If indication is normal, proceed to next step. If indication is abnormal, check Z1F1 and Z1S3. Check regulator adjustments (paragraph 6-6).
9	B_2 Figure 4-5	Connect multimeter to terminal 8 of Z1TB8 and ground to terminal 1 of Z1TB8.	Meter reads 110 ±2% Vac.	If indication is not present, check Z1F2, Z1T3, Z1S3, and S16. If indication is normal, proceed to next step.
10	B_3 Figure 4-5	Connect multimeter to terminal 1 of Z1TB3 and ground to terminal 1 of Z1TB4.	Meter reads 208 ±2% Vac.	If indication is abnormal, check circuit breaker Z1CB2. Check fan motor Z1B2 for short, if Z1CB2 is open. (See figure 6-6.)

TABLE 5-3. POWER SUPPLY PP-2540/FPN-42, VOLTAGE REGULATOR Z2, FUNCTIONAL SECTION TROUBLE-SHOOTING CHART

STEP	TEST POINT	PRELIMINARY ACTION	NORMAL INDICATION	NEXT STEP
1	5 Figure 4-6	Using terminals 1, 2, and 3 of Z2TB1, measure, with multimeter, the input voltage of each phase (ØA, ØB, and ØC), after applying the line voltage to the power supply.	Meter reads 208 ±10% Vac in each phase and BLOWN FUSE INDICATORS DS7, DS8 and DS9 do not glow.	If indication is normal, proceed to next step. If indication is abnormal, check fuses F1, F2, and F3 (figure 6-12).

TABLE 5-3. POWER SUPPLY PP-2540/FPN-42, VOLTAGE REGULATOR Z2, FUNCTIONAL SECTION TROUBLE-SHOOTING CHART (Cont)

STEP	TEST POINT	PRELIMINARY ACTION	NORMAL INDICATION	NEXT STEP
1 (Cont)				If indication is abnormal, check line voltage source.
2	6 Figure 4-6	Using terminals 4, 5, and 6 of Z2TB1, measure, with multimeter, the output voltage of each phase of Z2T1 (ØA, ØB, and ØC).	Meter reads 208 ±2% Vac in each phase.	If indication is normal, proceed to step 3. If indication is abnormal, proceed to step 4.
3		Joggle regulator, along with RAISE or LOWER lever on control panel of Z2 (figure 6-9), until regulator relay Z2K1 picks up. Leave multimeter connected as in step 2, above.	Regulator relay picks up when voltage variation exceeds 2 percent. Drive motor then returns regulator to its original position.	If indication is abnormal, check calibration of Z2K1. (Refer to paragraph 6-6.) If Z2B1 does not actuate when Z2K1 picks up, proceed to step 5. If indication is abnormal, proceed to step 4.
4	7 Figures 4-6 and 4-10	Connect multimeter to VOLTMETER terminals Z2TP1-1 and Z2TP1-2.	Meter reads 208 ±2% Vac.	If indication is normal, proceed to step 5. If indication is abnormal, check Z2F1, Z2F2, and Z2S4 (figures 6-10 and 6-11). (Refer to paragraphs 6-6 and 6-9.)
5	C1 Figure 4-6	Connect multimeter to terminal 35 on Z2T3 and ground to chassis.	Meter reads 110 ±10% Vac.	If indication is normal, check Z2K2 (paragraph 6-10), the holding coil of Z2K1 (paragraph 6-8) and HOLDING EFFECT control Z2R1 (paragraph 6-6). If indication is normal proceed to step 6. If indication is abnormal, check Z2T3.

TABLE 5-3. POWER SUPPLY PP-2540/FPN-42, VOLTAGE REGULATOR Z2, FUNCTIONAL SECTION TROUBLE-SHOOTING CHART (Cont)

STEP	TEST POINT	PRELIMINARY ACTION	NORMAL INDICATION	NEXT STEP
6	C_2 Figure 4-6	Connect multimeter to terminal 7 of Z2TB3 and ground to chassis.	Meter reads 110 ±2% Vac.	If indication is normal, check Z2S1, Z2S2, Z2C1, Z2B1, Z2K2, and Z2S3. If indication is abnormal, check thermal cutout Z2F3 and transformer Z2T2.

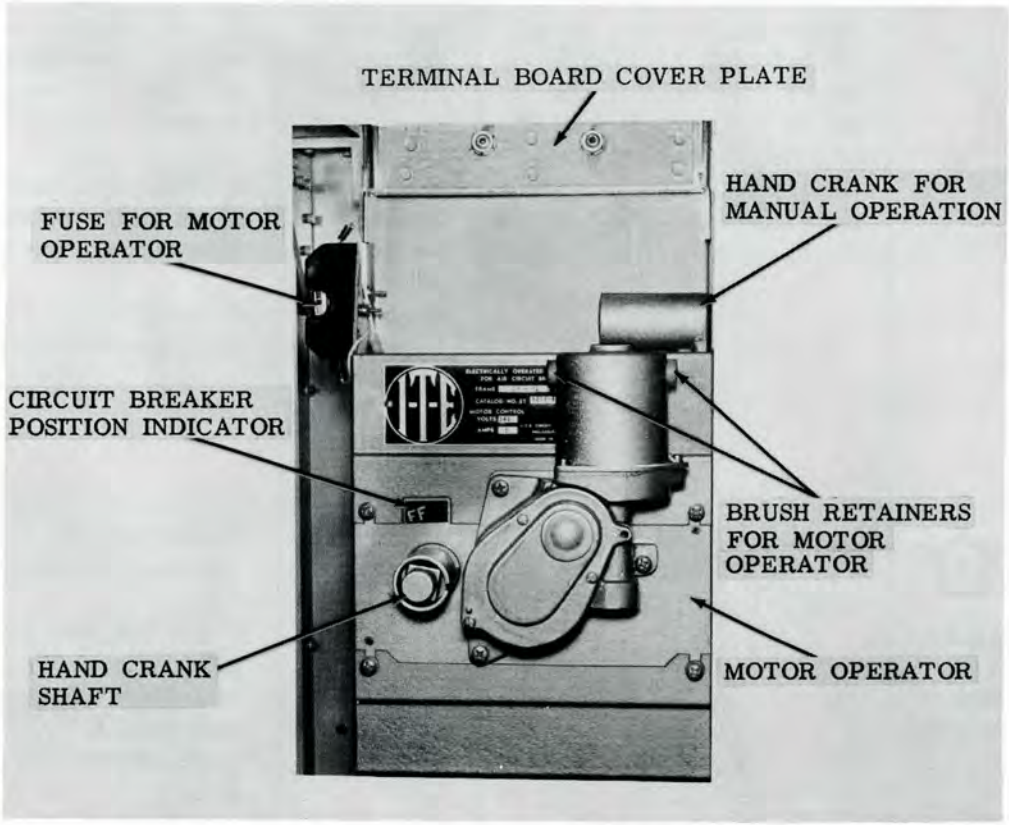

Figure 5-1. Circuit Breaker CB1 (Serial No's 1-16)

5-7. CONTROL CIRCUITS, TROUBLE-SHOOTING.

Refer to table 5-4 and trouble-shoot the control circuits in accordance with the indicated instructions.

5-8. BIAS VOLTAGE CIRCUITS, TROUBLE-SHOOTING.

Refer to table 5-5 and trouble-shoot the bias voltage circuits in accordance with the indicated instructions. See figure 5-2 should replacement of a diode in SD1 be necessary.

TABLE 5-4. POWER SUPPLY PP-2540/FPN-42, CONTROL CIRCUITS, FUNCTIONAL SECTION TROUBLE-SHOOTING CHART

STEP	TEST POINT	PRELIMINARY ACTION	NORMAL INDICATION	NEXT STEP
1	A2 Figures 2-2, 4-8, and 6-9	Perform steps 1 through 7 of table 3-2 and connect prod of multimeter to TB24, terminal 4, and ground to terminal 4 of TB33.	No reading for first 15 seconds; then DS10 glows and AC meter reads 120 ±10% Vac.	Check K1. Adjust 15-second delay by rotating knob on top of relay. (See figure 6-12.) Replace if necessary.
2	A3 Figures 2-2, 4-8, and 6-9	Connect prod of multimeter to TB24, terminal 6, and ground to terminal 4 of TB33.	No reading for 300 seconds after DS10 glows; then DS13 glows and AC meter reads 120 ±10% Vac.	Check DS13 if meter reads correctly and indicator does not light. Check N.O. contacts of K2 and K33 (figure 6-12), if normal indication is absent. Adjust 300-second delay with knob on top of K2. Replace if necessary.
3	A4 Figures 2-2, 4-8, and 6-9	Connect prod of multimeter to TB24, terminal 3, and ground to terminal 5 of TB33.	AC meter reads 120 ±10% Vac after DS13 glows.	If indication is normal, proceed to step 5. If indication is absent, repeat steps 1, 2, and 3 of this table and observe action of circuit breaker CB1 (figure 5-1) by opening door of left hand cabinet section and defeating door interlock switch (using procedures in paragraph 6-6a.(2)(a)3.). CB1 shall be in the ON position after START switch (S8) is depressed. If motor operator does not perform, check its fuse and use hand crank to manually close circuit breaker.

TABLE 5-4. POWER SUPPLY PP-2540/FPN-42, CONTROL CIRCUITS, FUNCTIONAL SECTION TROUBLE-SHOOTING CHART (Cont)

STEP	TEST POINT	PRELIMINARY ACTION	NORMAL INDICATION	NEXT STEP
3 (Cont)				If indication is still absent, check N.O. contacts of K2 and B1-B2, N.O. contact of CB1 undervoltage trip coil. (See inset, figure 4-8.) If indication is still absent, proceed to next step.
4	A5 Figures 2-2, 4-8, and 6-9	Connect multimeter prods to TB4, terminal 14 and ground to terminal 5 of TB33.	Meter reads 120 ±10% Vac after DS13 glows.	If indication is normal, proceed to next step. If indication is absent, check K34 and its associated contacts. Refer to paragraph 6-11 for repair procedures.
5	A6 Figures 2-2, 4-8, and 6-2	Place BIAS VOLTAGE switch S2 and PLATE VOLTAGE switch S3 to ON position. Connect prod of multimeter to terminal 13 of TB4, and ground to terminal 5 of TB33.	Meter reads 120 ±10% Vac after DS13 glows.	If indication is normal, proceed to step 6. If indication is absent, check Z1S6 (figure 6-8) and also that Z1 has reached its lower limit. (Refer to table 5-2.)
6	A7 Figures 2-2, 4-8, and 6-9	Connect prod of multimeter to terminal 12 of TB27, and ground to terminal 5 of TB33.	Meter reads 120 ±10% Vac after DS13 glows and Z1 has reached its lower limit, indicated by the glowing of PLATE VOLTS MIN. indicator DS24 (56, figure 3-1).	If indication is normal, proceed to step 7. If meter fails to read properly and DS24 glows, check thermal cutouts of K27 (figure 6-23), check Z1K3 and the N.O. contacts of K7.

TABLE 5-4. POWER SUPPLY PP-2540/FPN-42, CONTROL CIRCUITS, FUNCTIONAL SECTION TROUBLE-SHOOTING CHART (Cont)

STEP	TEST POINT	PRELIMINARY ACTION	NORMAL INDICATION	NEXT STEP
7	A8 Figures 2-2, 4-8, and 6-9	Connect multimeter test prod to terminal 12 of TB10, and ground to terminal 4 of TB33.	Meter reads zero.	If reading is normal, proceed to next step. If meter indicates any voltage, check door interlock switches S13 and S18 through S22, interlock relay K21 (figure 6-1), all interlock switches external to the power supply and then interlock relays K22 and K23 (figure 6-1).
8	A13	Connect multimeter prods to terminal 1 of TB10 and terminal 5 of TB33. Depress OVERLOAD RESET switch S10 (44, figure 3-1).	Meter reads 120 ±10% Vac and OVERLOAD INDICATOR DS21 through DS16 (45 through 50, figure 3-1) all glow.	If meter reading is normal, but any one of indicators DS16 through DS21 does not glow, check unlit indicator and its associated relay (K15 through K20, respectively). If meter reading is abnormal, check contacts of K4, K5, and K10 through K14. (See figures 6-1 and 6-2.) If meter reading is normal and all OVERLOAD INDICATOR lamps do not glow, check S10. If all indications are normal, proceed to step 9.
9	A9 Figures 2-2, 4-8, and 6-9	Connect multimeter test prod to terminal 1 of TB26 and ground to terminal 4 of TB33.	AC meter reads 120 ±10% Vac and LOW LINE VOLTS INDICATOR DS31 (43, figure 3-1) flashes.	If indicator DS31 flashes and normal meter reading does not occur, check contacts of K24.

TABLE 5-4. POWER SUPPLY PP-2540/FPN-42, CONTROL CIRCUITS, FUNCTIONAL SECTION TROUBLE-SHOOTING CHART (Cont)

STEP	TEST POINT	PRELIMINARY ACTION	NORMAL INDICATION	NEXT STEP
9 (Cont)				If indicator DS31 glows continuously, check that K24 is de-energized. To de-energize K24, shut down equipment with external line switch and repeat operating steps 1 through 7 of table 3-2. If indicator DS31 glows continuously, check K35. If indicator DS31 does not glow at all, check and replace if necessary; also check K24 and K35.
		Leave multimeter connected as above and depress LOW LINE VOLTS RESET switch S11 (36, figure 3-1).	AC meter reads zero and LOW LINE VOLTS INDICATOR DS31 (43, figure 3-1) glows continuously.	If any deviation from the normal indications are observed, check R22 (should be set to 2,200 ohms), S11, K24, and K35. If no defect is found, check line voltage with PRIMARY VOLTAGE meter M18 (14, figure 3-1) as described in step 5 of table 3-2. Normal indication will not occur if line voltage is below 10% of 208 Vac in any phase.

TABLE 5-5. POWER SUPPLY PP-2540/FPN-42, BIAS VOLTAGE CIRCUITS, FUNCTIONAL SECTION TROUBLE-SHOOTING CHART

STEP	TEST POINT	PRELIMINARY ACTION	NORMAL INDICATION	NEXT STEP
1	8 Figure 4-10	Connect multimeter test leads to terminals 7 and 8 of TB22, perform steps 1 through 7 of table 3-2, and rotate -300 BIAS ADJUST control T7 (25, figure 3-1) to maximum clockwise position.	AC meter reads 226 ±2% Vac and indicators DS26 and DS32 (35 and 34, figure 3-1) do not glow.	If DS26 and/or DS32 glows, check fuses F6 and F8 (figure 6-2). If meter does not read normally, check T7.
2	9 Figure 4-10	Connect multimeter test leads to terminals 9 and 10 of TB22, and rotate -600 BIAS ADJUST control T8 (26, figure 3-1) to maximum clockwise position.	AC meter reads 226 ±2% Vac and indicators DS27 and DS33 (33 and 32, figure 3-1) do not glow.	If DS27 and/or DS33 glows, check fuses F7 and F9 (figure 6-2). If meter does not read normally, check T8.
3	D Figure 4-10	Connect multimeter test prod to TB22, terminal 11, and ground to TB22, terminal 8.	AC meter reads 226 ±2% Vac.	If indication is normal, proceed to next step. If indication is abnormal, check T7. Replace brush, if necessary, in accordance with paragraph 6-12.
4	E Figure 4-10	Connect multimeter test prod to TB22, terminal 12, and ground to TB22, terminal 10.	AC meter reads 226 ±2% Vac.	If indication is normal, proceed to step 5. If indication is abnormal, check T8. Replace brush, if necessary, in accordance with paragraph 6-12.
5		Flip up BIAS VOLTAGE switch S2 (19, figure 3-1).	BIAS ON indicator DS15 (16, figure 3-1) glows steadily.	If indication is abnormal, check DS15. If indication is abnormal, refer to table 5-4, step 4.

TABLE 5-5. POWER SUPPLY PP-2540/FPN-42, BIAS VOLTAGE CIRCUITS, FUNCTIONAL SECTION TROUBLE-SHOOTING CHART (Cont)

STEP	TEST POINT	PRELIMINARY ACTION	NORMAL INDICATION	NEXT STEP
5 (Cont)			-300 V BIAS VOLTAGE meter M13 (10, figure 3-1) reads -270 ±5 volts.	If indication is abnormal, proceed to step 6. If indication is normal, proceed to step 8.
			-600 V BIAS VOLTAGE meter M14 (11, figure 3-1) reads -540 ±10 volts.	If indication is abnormal, proceed to step 6. If indication is normal, proceed to step 9.
		CAUTION Check for voltage between terminals 7 and 11 of TB18 (120 Vac) before checking resistance. If voltage is present, do not check resistance, as indication will be abnormal and could damage multimeter.	Multimeter reads zero volts.	
6	A10 Figure 4-10	Using lowest resistance range on multimeter, connect test leads of multimeter to terminals 5 and 19 of TB18.	Meter reads zero ohms.	If indication is abnormal, check setting of R13 and R14. (Refer to paragraph 6-5c.) If indication is abnormal, check R13, R14, R17, R18, K8, and K9, in that order.
7	A11 Figure 4-10	Using lowest resistance range on multimeter, connect test leads of multimeter to terminals 7 and 11 of TB18.	Multimeter reads zero volts.	If indication is abnormal, check for overload. Depress 3 STRIKE RESET switch S9 (39, figure 3-1) and re-check
			Meter reads zero ohms.	If indication is abnormal, check K10 and K11.
8	10 Figure 4-10	Switch multimeter to 250 Vdc range and connect to terminal 6 of TB18 and ground to chassis.	DC meter reads -270 ±5 Vdc.	If indication is abnormal, check K10 (figure 6-2) and SD1 (figures 5-2 and 6-2).

TABLE 5-5. POWER SUPPLY PP-2540/FPN-42, BIAS VOLTAGE CIRCUITS, FUNCTIONAL SECTION TROUBLE-SHOOTING CHART (Cont)

STEP	TEST POINT	PRELIMINARY ACTION	NORMAL INDICATION	NEXT STEP
9	11 Figure 4-10	Switch multimeter to 1000 Vdc range and connect test leads to terminals 9 and 10 of TB18.	DC meter reads -540 ±10 Vdc.	If indication is abnormal, check K11 and SD2 (figure 6-2).

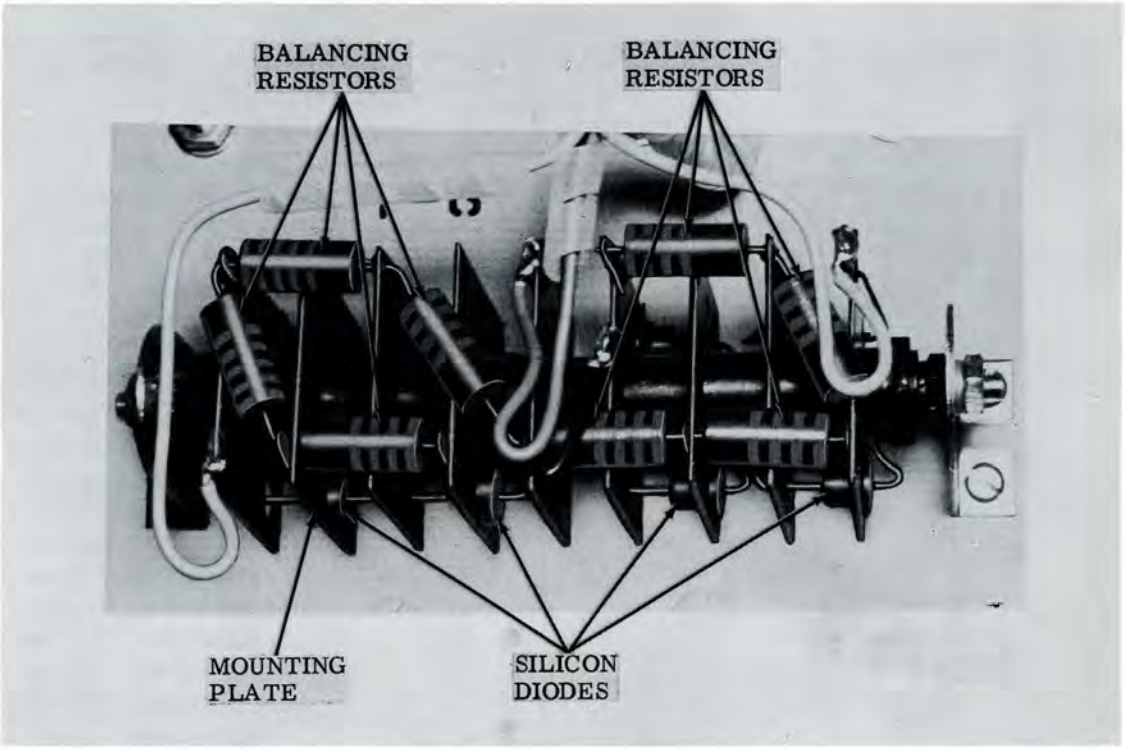

Figure 5-2. Silicon Diode Assembly SD1, Parts Identification

5-9. HIGH-VOLTAGE CIRCUITS, TROUBLE-SHOOTING.

Refer to table 5-6 and trouble-shoot the high-voltage circuits in accordance with the indicated instructions.

WARNING

DO NOT attempt voltage measurement at any point other than that specifically called out in table 5-6. DO NOT attempt resistance measurements in any portion of the high-voltage circuits unless the power supply is completely de-energized and all external equipment is disconnected.

When measuring voltages in excess of 300 volts, exercise extreme caution to avoid bodily contact with any portion of the circuitry.

TABLE 5-6. POWER SUPPLY PP-2540/FPN-42, HIGH-VOLTAGE CIRCUITS, FUNCTIONAL SECTION TROUBLE-SHOOTING CHART

STEP	TEST POINT	PRELIMINARY ACTION	NORMAL INDICATION	NEXT STEP
1	12 Figures 2-2 and 4-12	Using terminals 1, 2, and 3 of TB20, measure each phase (ØA, ØB, and ØC), with multimeter, after performing steps 1 through 10 of table 3-2.	AC meter reads 100 ±2% Vac in each phase.	If indication is normal, proceed to next step. If indication is abnormal, check Z1. (Refer to table 5-2.) If indication is abnormal, check control circuits. (Refer to table 5-4.)
2		Flip up PLATE VOLTAGE switch S3 (18, figure 3-1).	RECTIFIER CURRENT meters "M1" through "M12" (figure 3-1) indicate current values established at time of installation.	If any meter (figure 3-1) fails to indicate, replace its associated rectifier tube. [Refer to paragraph 6-7b.(2).] (See figure 6-9.) If any meter (figure 3-1) fails to indicate, open door of center cabinet section, defeat interlock switch, and observe that all tube filaments are glowing. Replace any unlit tube (figure 6-9) if necessary. Check filament transformers T2 and T3 (figure 6-9). If all meters (figure 3-1) read zero and all tube filaments are lit, check K27 (figure 6-23). Check bias undervoltage relays K8 and K9. (Refer to table 5-5.) (See figure 6-2.) Check plate voltage switch in external equipment.

TABLE 5-6. POWER SUPPLY PP-2540/FPN-42, HIGH-VOLTAGE CIRCUITS, FUNCTIONAL SECTION TROUBLE-SHOOTING CHART (Cont)

STEP	TEST POINT	PRELIMINARY ACTION	NORMAL INDICATION	NEXT STEP
2 (Cont)				If circuit breaker CB1 (figure 5-1) trips, check for external overload. Check grounding relays K25 and K26. If indications are normal, proceed to step 3.
3		Depress RAISE MAN. PLATE VOLT ADJUST switch S23 (54, figure 3-1) for a few seconds.	Voltages indicated by 15.5 KV PLATE VOLTAGE meter M15 (67, figure 3-1), 7.75 KV DRIVER PLATE VOLTAGE meter M16 (66, figure 3-1), 3.8 KV DRIVER PLATE VOLTAGE meter M17 (65, figure 3-1) rise in proportion to each other. (Refer to paragraph 4-9b.)	If indication is abnormal, check Z1. (Refer to table 5-2.) If indication is normal, but one or more outputs are unobtainable at external equipment, check overload relays K12, K13, and K14. (See figures 6-1 and 6-3.) (Refer to paragraph 6-5d.)

5-10. VOLTAGE AND RESISTANCE DIAGRAM.

Figure 5-3 illustrates typical resistance normally encountered in the power supply. All test points listed are shown in figure 6-27. Because of the presence of dangerously high voltages in the power supply, no voltage measurements are included here.

CHECK	TEST POINT	FROM	TO	RESISTANCE (OHMS)
AC Inputs	A_{12}	11-1	Ground	80
	A_{12}	11-2	Ground	80
	A_{12}	11-3	Ground	80
High Voltage Outputs				
3.8 KV	F	3-1	Ground	1000
15.5 KV	F	3-2	Ground	4000
7.75 KV	F	3-3	Ground	2000
T1 Transformer	F_1	A	B	9
Delta Secondary	F_1	B	C	9
	F_1	C	A	9
Wye Secondary	F_2	N	29-1	1100
L1 Filter Choke	F_3	Across Coil		100
	F_4	30-1	29-1	1000
Rectifier Tubes				
V1	F_5	Filament	33-6	4000
V2	F_6	Filament	33-6	4000
V3	F_7	Filament	33-6	4000
V7	F_8	Filament	33-6	2000
V8	F_9	Filament	33-6	2000
V9	F_{10}	Filament	33-6	2000
V10	F_{11}	Filament	33-6	1000
V11	F_{12}	Filament	33-6	1000
V12	F_{13}	Filament	33-6	1000

Figure 5-3. Resistance Measurements

5-11. TYPICAL TROUBLES.

Table 5-7 lists troubles which are typical of those that might occur during operation of the power supply and describes the nature of the possible trouble together with symptoms by which the trouble may be recognized.

5-12. LOCATION OF PARTS.

Refer to figures 3-1 and 6-1 through 6-26 for the location and identification of parts. Reference should also be made to table 7-1 for part number and nomenclature information.

TABLE 5-7. TYPICAL TROUBLES

TROUBLE	NATURE OF TROUBLE	SYMPTOMS
Loss of output voltage control	Voltage regulator overload operates, removing power from drive motor.	Plate voltage fails to raise or lower in manual or automatic operation.
Power supply continuously overloads	Filament bypass capacitor in power amplifier defective, allowing r-f current to flow in overload relay coil.	Overload relay chatters, overheats, and operates erratically.
-600 volt bias supply fails to remain on	-600 volt overload relay K11 too sensitive to starting surge.	-600 volt overload operates when bias is put on at high output setting.
Loss of plate and bias control	Circuit breaker trip lever operating motor reversal switch in CB1 misadjusted.	Circuit breaker motor continuously operates without moving breaker to ON position.
Loss of filament voltage	Cooling, blower inoperative, failing to activate air switch.	Transmitter regulated voltages fail to appear.
Power supply output voltages inadequate	Input line power below allowable tolerances.	Power supply output voltages below desired level when MAX light is illuminated.
Reduced power supply current output	Defective power supply rectifier tube.	Individual rectifier current meter indicates below average plate current.

TABLE 5-7. TYPICAL TROUBLES (Cont)

TROUBLE	NATURE OF TROUBLE	SYMPTOMS
Unstable output voltages	Voltage regulator controls misadjusted.	Output plate or regulated AC voltages oscillate rapidly between two values.
Power supply overheats	Power supply output shorted to ground, bypassing overload relays.	Extremely high rectifier current indication.

SECTION 6

SERVICE AND REPAIR

6-1. FAILURE REPORT.

Submission of electronic equipment failure reports shall be made in accordance with current instructions contained in the USCG Electronic Maintenance Manual, CG-165, and on the prescribed form indicated therein. The importance of providing complete information cannot be emphasized. Do not substitute brevity for clarity.

6-2. PREVENTIVE MAINTENANCE.

Other than those procedures of preventive maintenance which require periodic checking for security of mountings and terminal board connections, for evidence of overheating as revealed by charring or cracking, and for general cleanliness, the following procedures must be observed:

a. AIR FILTER. - Inspect air filter (figure 6-12) weekly for clogging or heavy accumulation of dirt or dust. If necessary to clean filter, proceed as follows:

(1) Remove filter from cabinet and place in a container of water or cleaning solvent and agitate until dirt or dust falls free of filter.

(2) Remove filter and allow to dry thoroughly.

(3) Dip filter in a container of lubricating oil and drain off excess oil by placing filter face down on a drain facility.

NOTE

The viscosity of the oil must be such that the oil remains viscous at low temperatures.

(4) After all excess oil has been drained, replace filter in cabinet.

b. TRANSFORMER T1. - The level of the oil in transformer T1 must be checked periodically, the frequency of checking depending on the constancy of operation of the power supply and the ambient temperature at the site. If inspection reveals a low oil condition in the transformer, proceed as follows:

(1) Remove filler plug from transformer (figure 6-14) and fill with oil to the required level, using Univolt No. 35, or equivalent.

(2) Replace plug and check for evidence of leakage from gaskets or because of housing cracks.

c. VOLTAGE REGULATORS Z1 AND Z2. - Preventive maintenance for regulators Z1 and Z2 consists of the following procedures:

(1) Every 30 days clean the regulator windings (figures 6-8 and 6-10) by blowing away the accumulated dust with a stream of clean, dry, compressed air.

(2) Lubricate the main worm and worm gear (directly below the drive motor) of each regulator periodically, the frequency of lubrication depending upon frequency of operation, ambient temperature, and general cleanliness of the site.

6-3. PERFORMANCE STANDARDS.

The performance standards which must be met by a repaired power supply prior to being placed back in service are listed in the "NORMAL INDICATION" column of tables 3-2 and 3-3. Completion of an operating check in accordance with those tables will readily determine whether or not the equipment is operating satisfactorily. In the event the power supply fails to meet the listed requirements, reference should be made to the troubleshooting charts, tables 5-1 through 5-6, for recommended remedial action.

6-4. REPAIR.

The following paragraphs contain instructions for the adjustment, removal, disassembly, replacement or repair, and reassembly of the components of the power supply together with supplementary illustrations for parts location and identification.

6-5. ADJUSTMENT PROCEDURES.

a. TEST EQUIPMENT AND SPECIAL TOOLS. No special tools or test equipment is required for performing the adjustments necessary to insure proper operation of the power supply. A multimeter, AN/USM-162, or equivalent, is suitable for all adjustments.

b. LOW-VOLTAGE ALARM ADJUSTMENT. - The only adjustment required for the low-voltage alarm circuit is to set R22 (figure 6-1) to 2,200 ohms. Use the resistance scale of the multimeter for this adjustment.

c. BIAS VOLTAGE LOSS ADJUSTMENT.

(1) Perform operating steps 1 through 8 in table 3-2.

(2) Rotate -300 BIAS ADJUST control (25, figure 3-1) and -600 BIAS ADJUST control (26) to their extreme counterclockwise (minimum) positions.

(3) Rotate variable resistor R13 (figure 6-2) until relay K8 energizes.

(4) Rotate variable resistor R14 (figure 6-2) until relay K9 energizes.

d. OVERLOAD RELAY ADJUSTMENTS (figure 6-3). - Two adjustments (delay and current) are provided on overload relays K10 through K14. The adjustment procedure is the same for all the overload relays and is performed as follows:

WARNING

Remove overload relays K12, K13, and K14 from the equipment for adjustments. High voltages present may cause severe injury or death when unit is in operation.

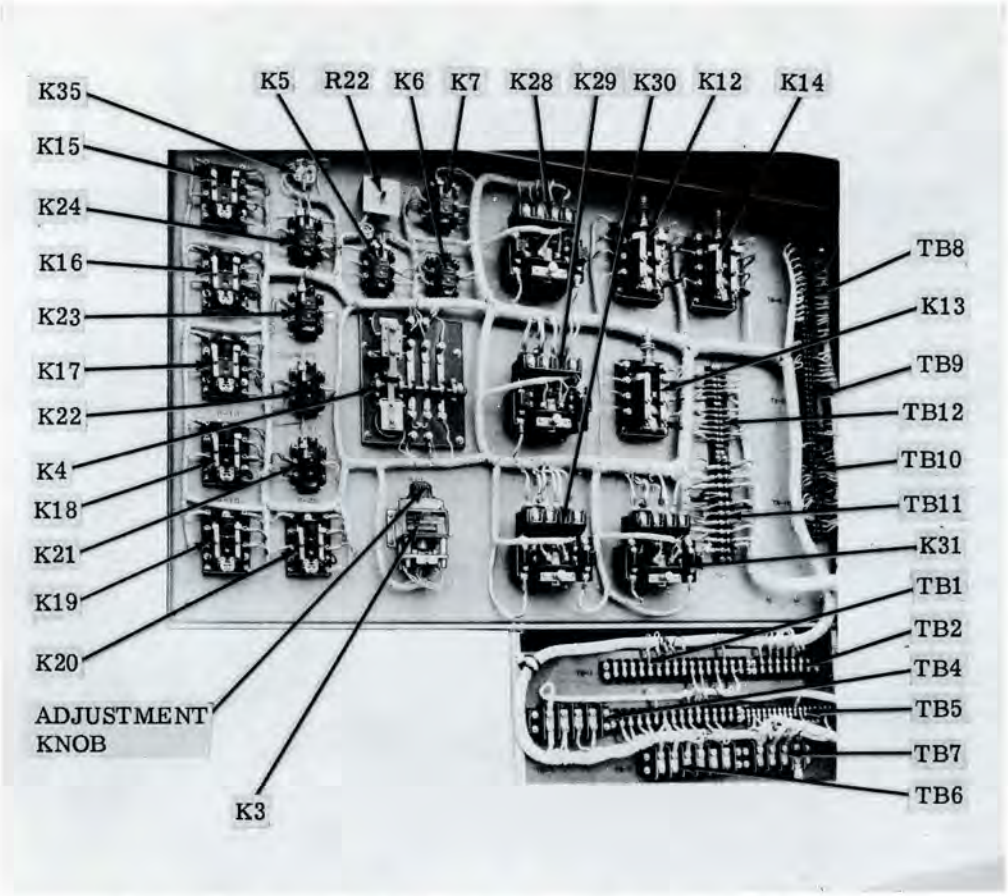

Figure 6-1. Control Panel, Left Cabinet Section, Left Side Interior View

(1) DELAY ADJUSTMENT. - To prevent an overload relay from tripping at starting surges under load, increase the mechanical delay by turning the delay adjustment nut in toward the relay. When the adjustment is completed, lock the delay adjustment nut with the delay adjustment locknut.

(2) CURRENT ADJUSTMENT. - To insure proper circuit overload protection, each overload relay is adjusted to trip when current in excess of 10 percent greater than normal for the particular circuit passes through the relay which protects that circuit. The overload adjustment procedure is as follows:

(a) Hook up the operating coil of the overload relay as shown in figure 6-3, using a dc power supply capable of adjustment between 0 and 150 volts.

(b) Using the multimeter for measurement, adjust the power supply to provide the required tripping current. Rotate the current adjustment nut until the relay trips and read the current required on the multimeter. The correct current required for each relay is listed in table 6-1. Rotating the current adjustment nut outward increases the required tripping current and rotating the nut inward decreases the required current.

(c) After completion of the current adjustment, lock the current adjustment nut in place with the current adjustment locknut.

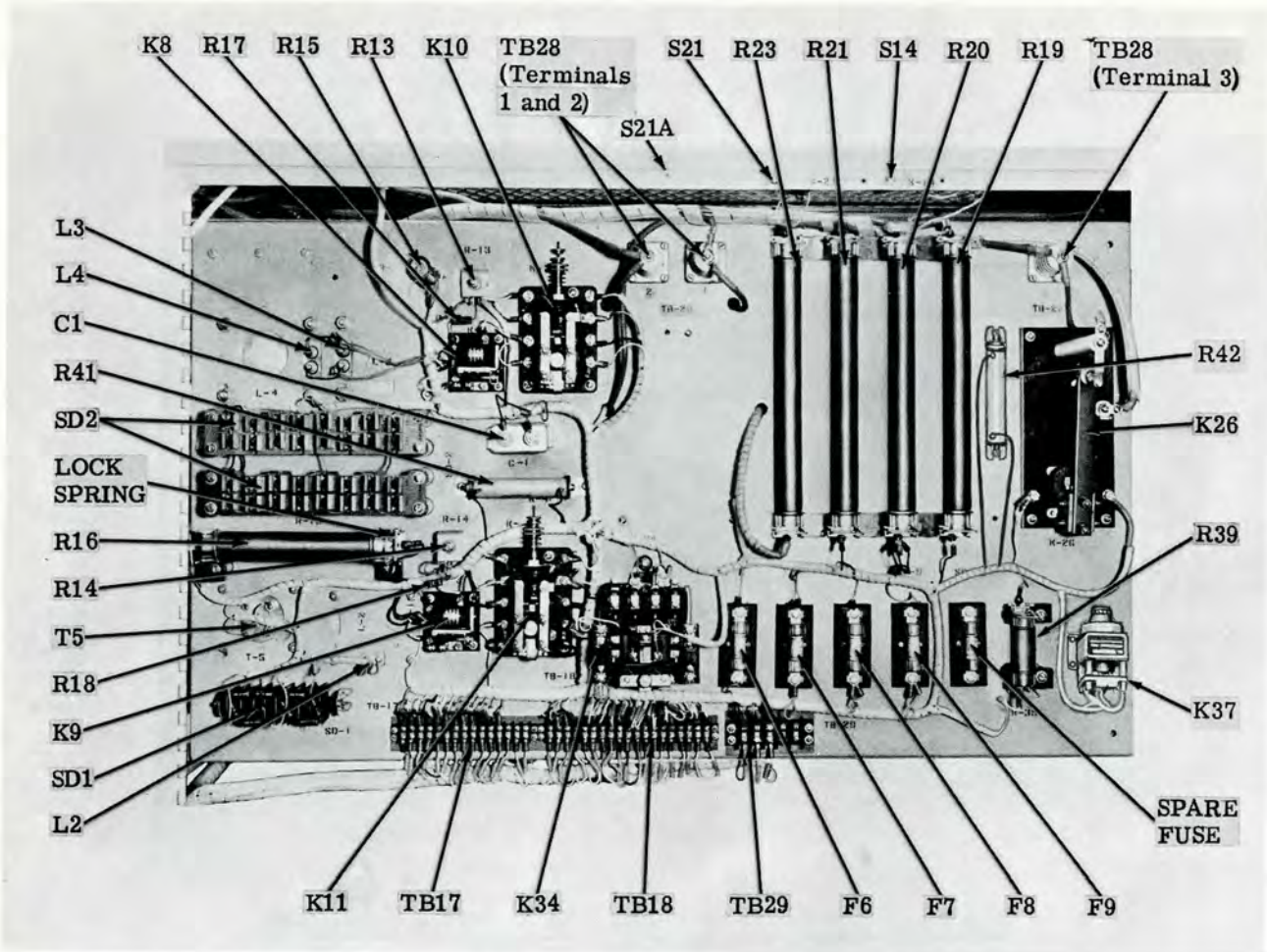

Figure 6-2. Control Panel, Right Cabinet Section, Right Side Interior View

TABLE 6-1. POWER SUPPLY PP-2540/FPN-42, OVERLOAD RELAY TRIPPING CURRENTS

RELAY	LOCATION	TRIPPING CURRENT
K10	Figure 6-2	2.20 milliamperes
K11	Figure 6-2	82.5 milliamperes
K12	Figure 6-1	6.05 milliamperes
K13	Figure 6-1	275 milliamperes
K14	Figure 6-1	275 milliamperes

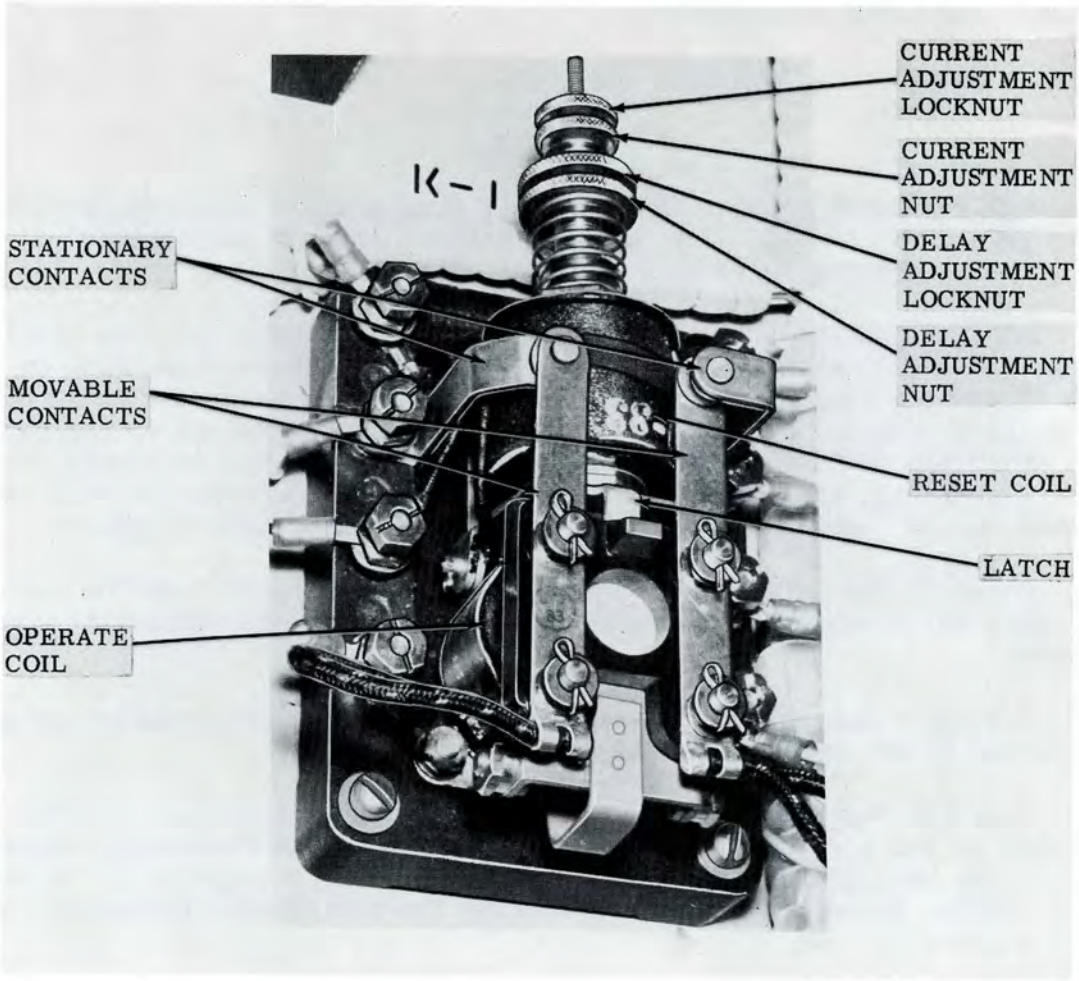

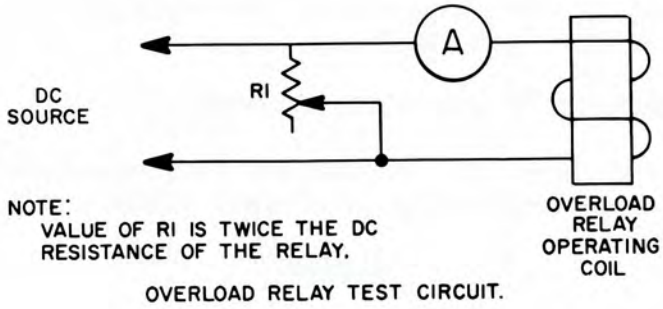

Figure 6-3. Typical Overload Relay, Adjustments and Parts Identification

6-6. VOLTAGE REGULATOR ADJUSTMENTS.

a. VOLTAGE REGULATOR RELAYS Z1K1 AND Z2K2.

CAUTION

The voltage regulator relay (figure 6-4) is an extremely sensitive device and must be treated as such. Under no circumstances attempt maintenance of this relay without becoming thoroughly familiar with the following instructions:

(1) CONTACT ALIGNMENT (figure 6-5). - As shown in figure 6-5, the spacing (B) of the contacts should always be less than (A), the difference depending on the bandwidth (tolerance range of regulating action) which in this case is ±2 percent of the regulated output. This bandwidth difference is determined by the requirement that after the contact is made and the holding effect has developed the necessary contact pressure, the contact centers approximately coincide as shown by the dotted lines on the right in figure 6-5. To adjust the contact alignment:

(a) Screw in the safety screw by carefully threading it into the solenoid core and case, while supporting the solenoid core with the forefinger to prevent misalignment.

(b) Carefully depress the balanced contact arm until it reaches the position shown in dotted lines on figure 6-5.

(c) Move the stationary contact, by means of the insulated extension provided, either to the left or right, until the center of the stationary contact coincides with the center of the movable contact. It should be possible to make this adjustment without loosening the screws holding the stationary contacts to the molded contact support.

(d) Repeat alignment procedure for the other movable contact and stationary contact by first lifting the contact bridge until a position similar to that shown in figure 6-5 is reached; then perform step (c), above.

(2) BANDWIDTH ADJUSTMENT (figure 6-4). - This adjustment involves changing the sensitivity range of the relay. By raising or lowering the height of the stationary contacts, a greater or lesser amount of change in solenoid current is required to effect full movement of the contact beam. The sensitivity range or bandwidth required is ±2 percent of the total regulator output.

(a) VOLTAGE REGULATOR Z1 BANDWIDTH ADJUSTMENT.

1. Unscrew front panel on left cabinet section and defeat panel interlock switch by pushing the interlock switch lever down slightly and then pulling it out.

WARNING

The interlock switches used in this equipment are for the safety of operating and servicing personnel. Do not defeat or attempt to defeat any interlock switch, except as specifically instructed in this manual. Under no circumstances allow any portion of the body to come in contact with any portion of the interior of the power supply, while the power supply is energized, unless specifically instructed to do so.

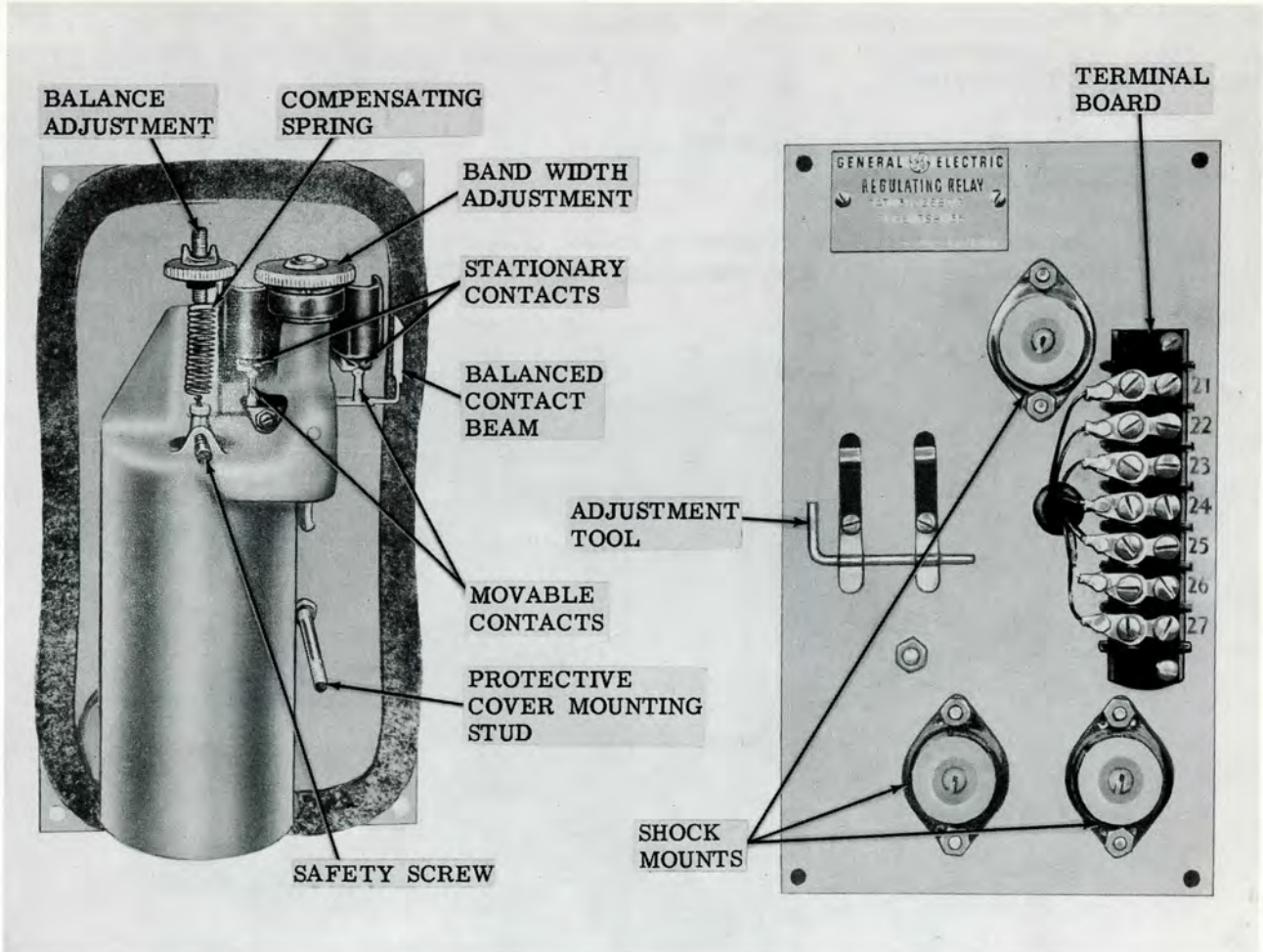

Figure 6-4. Voltage Regulator Relay

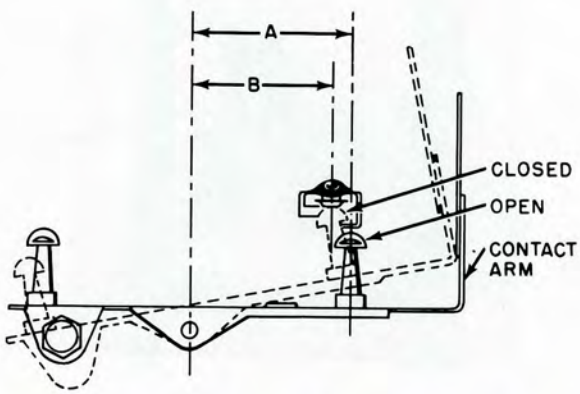

Figure 6-5. Voltage Regulator Relay, Contact Alignment

2. Perform operating steps 1 through 10 of table 3-2, if power supply is shut down. If power supply is already operating, turn PLATE VOLTAGE CONTROL switch (52, figure 3-1) to AUTO.

3. Set AUTO PLATE VOLT ADJUST control (53) to 10 kilovolts as read on 15.5 KV PLATE VOLTAGE meter (67).

4. Remove the voltage regulator relay (figure 6-6) protective cover by loosening the thumbscrew and then carefully withdrawing the cover.

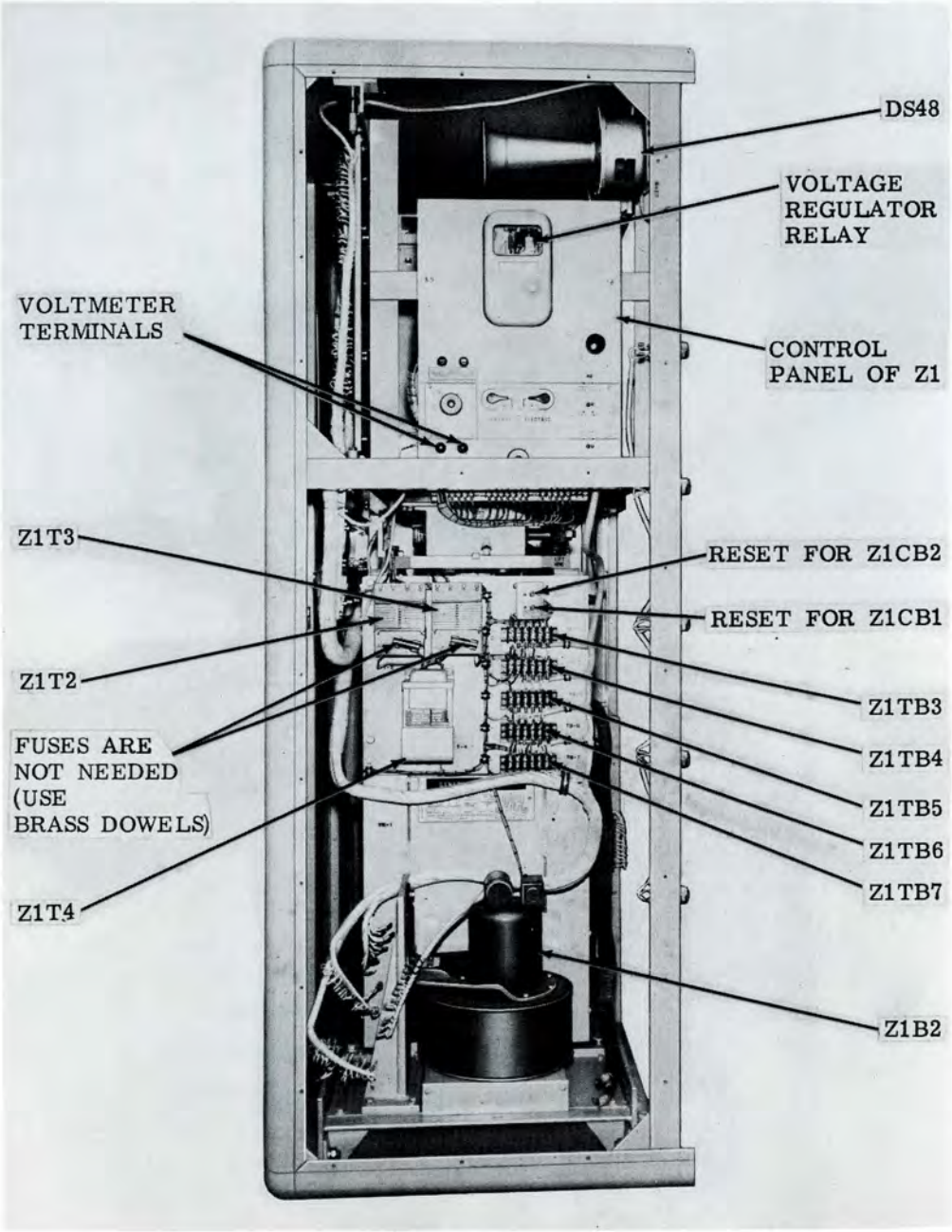

Figure 6-6. Left Cabinet Section, Front View, Front Panel Removed

5. Set the multimeter to the 300-volt ac range and connect it to the VOLTMETER terminals on the Z1 control panel (figure 6-6). Note and record the multimeter reading.

6. Joggle the regulator along by means of the RAISE or LOWER switches on the center cabinet section control panel (51 or 54, figure 3-1), until the voltage regulator relay makes contact and starts the drive motor Z1B1 (figure 6-7) which returns the regulator to its original position. Note and record the multimeter readings when the relay makes contact.

7. Note and record the multimeter reading when the drive motor stops running (i.e., when the regulator has returned to the position it held in step 5).

8. If the reading obtained in step 6. differs from that obtained in step 5. by less than 2 percent of the step 5. reading, bandwidth adjustment is unnecessary. If the reading in step 6. differs from that in step 5. by more than 2 percent of the step 5. reading, proceed to step 9. If the reading obtained in step 7. differs from that in step 5. by more than 0.5 percent of the step 5. reading, refer to paragraph 6-6a.(3).

9. Place the thumb of one hand on the bandwidth adjustment nut and move the nut one-half turn to the right, thereby lowering the stationary contacts.

NOTE

It may be necessary to re-align the horizontal positions of the stationary contacts so that each movable contact will meet with its respective stationary contact, center on center. Refer to paragraph 6-6a.(1).

10. Repeat steps 5. through 8., this paragraph. If correct readings still are not obtained, repeat step 9.; then perform steps 1. through 8. again. Repeat this procedure until correct readings are obtained.

(b) VOLTAGE REGULATOR Z2 BANDWIDTH ADJUSTMENT.

1. Open the front panel of the center cabinet section and, using the 300-volt ac range, connect the multimeter to the VOLTMETER terminals on the Z2 control panel. (See figure 6-9.)

2. Remove the protective cover as indicated in step 4. of paragraph 6-6a.(2)(a).

3. Defeat the interlock switch for the removed panel. [Refer to step 3. of paragraph 6-6a.(2)(a).]

4. Perform steps 6. through 10. of paragraph 6-6a.(2)(a).

(3) HOLDING EFFECT ADJUSTMENT. - Adjustment of the HOLDING EFFECT variable resistor Z1R1 (figure 6-8) or Z2R1 (figure 6-10) becomes necessary when the regulator rotor does not turn sufficiently to bring the output voltage back to normal. If the reading obtained in step 7. of paragraph 6-6a.(2)(a) differs from that obtained in step 5. of paragraph 6-6a.(2)(a) by more than 0.5 percent of the step 5. reading, proceed as follows:

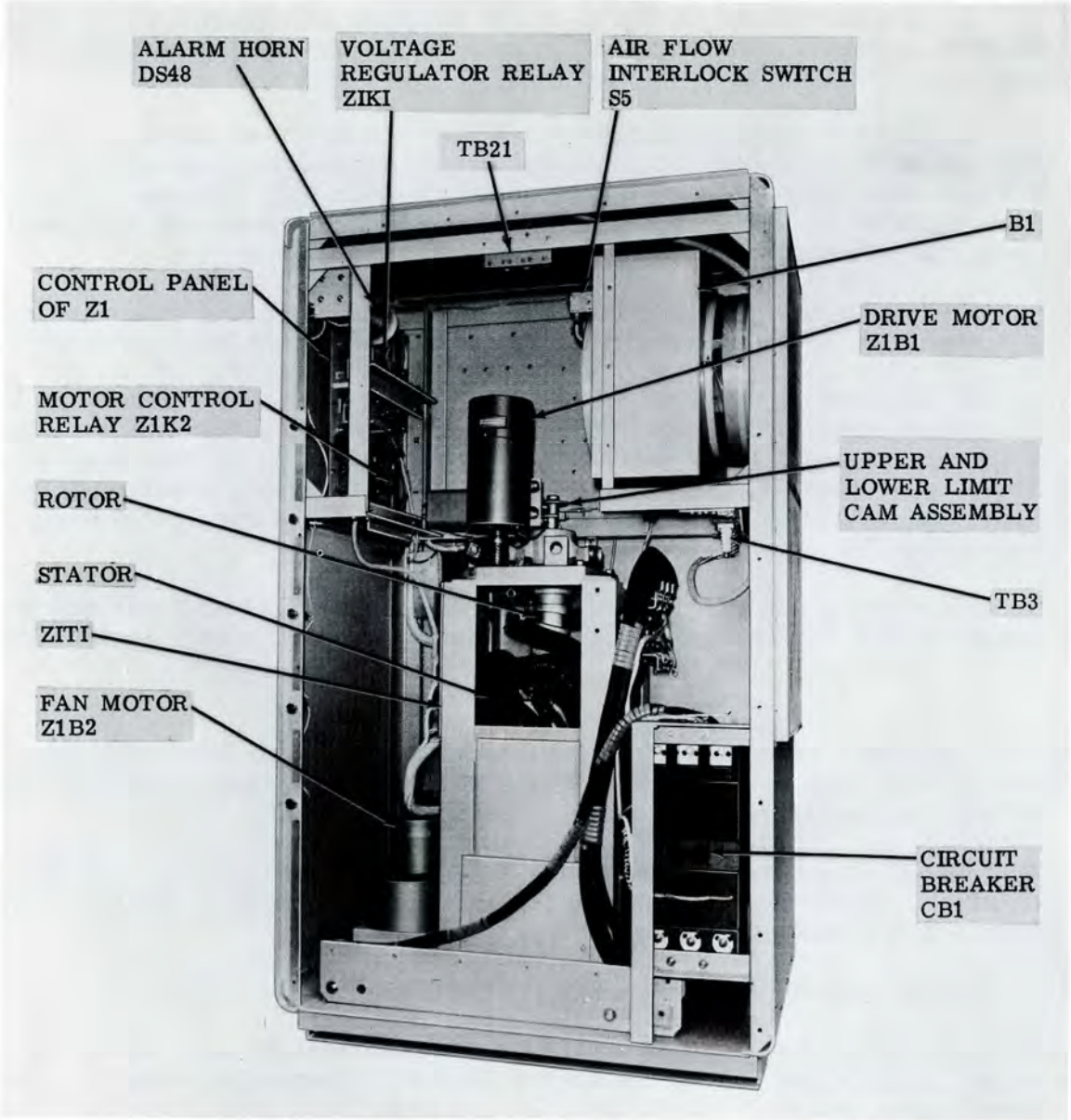

Figure 6-7. Left Cabinet Section, Right Side View

(a) Loosen lock screw on knob of Z1R1 (figure 6-8) or Z2R1 (figure 6-10) and, using 0-300 volts ac range, connect the multimeter to the VOLTMETER terminals in the regulator control panel.

(b) With the power supply energized, joggle the regulator along by means of the manual RAISE or LOWER levers on the regulator control panel until the solenoid on the regulator relay moves one of the movable contacts against its associated stationary contact. (See figures 4-6 and 4-7.) At this point, the drive motor (Z1B1 or Z2B1, figures 6-8 and 6-11) will be energized and will start to return the regulator rotor to its original position.

(c) If the solenoid begins to move before the regulator rotor has reached its original position, rotate HOLDING EFFECT variable resistor Z1R1 or Z2R1 knob slightly. Rotate knob just enough to keep regulator relay solenoid from dropping

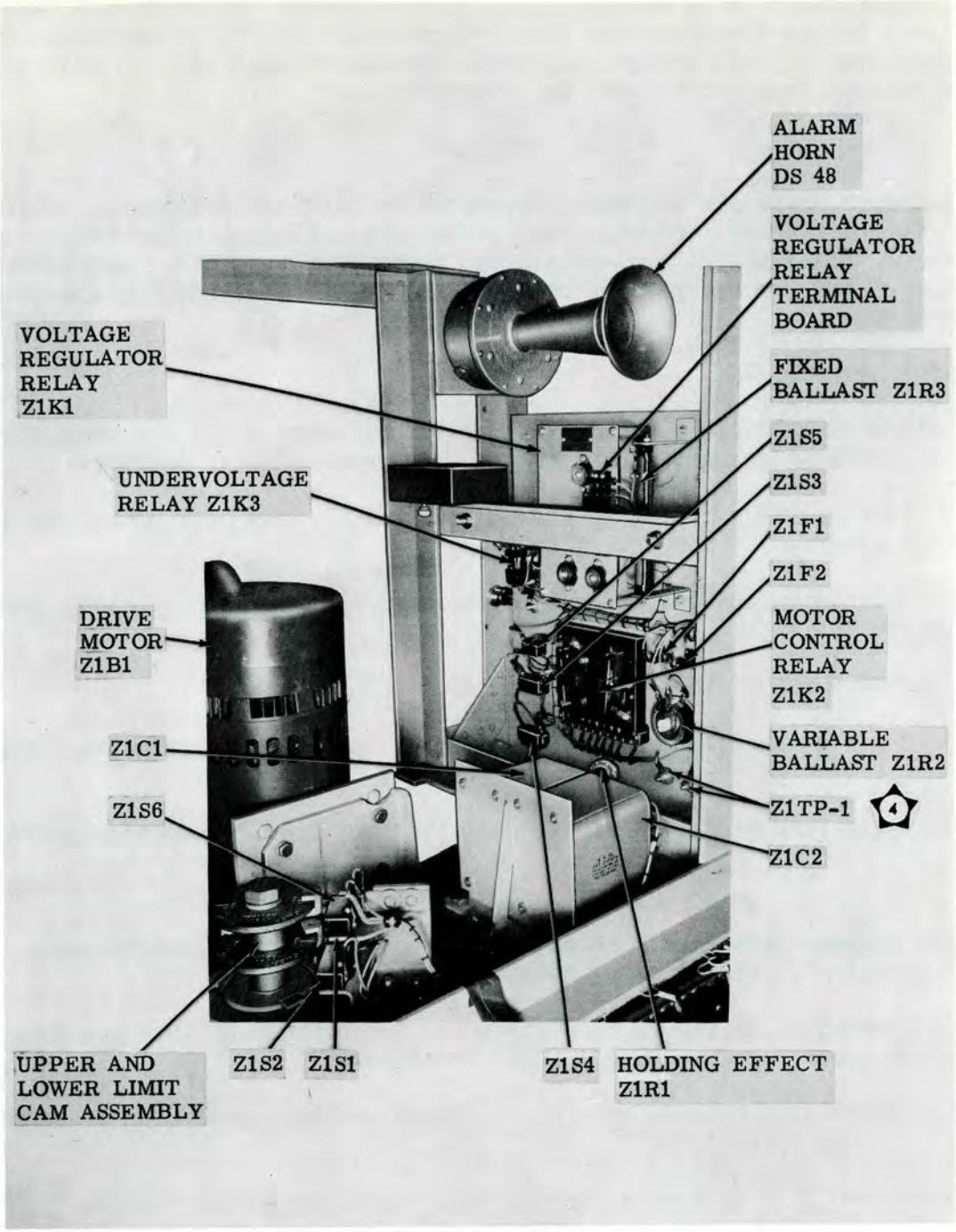

Figure 6-8. Components of Voltage Regulator Z1, Left Cabinet Section, Interior View

out, until the regulator rotor has reached its original position. This can be determined by comparing the multimeter readings, prior to adjustment and when adjustment is completed.

6-7. REMOVAL OF PARTS AND SUB-ASSEMBLIES.

a. GENERAL. - The removal procedures for parts and sub-assemblies are generally obvious upon inspection. However, for ease of replacement and safety of operation,

tag all leads before disconnecting them, place small parts that are removed in separate containers to avoid damage, and avoid the use of splices. In addition, the following special procedures shall be observed:

WARNING

High voltages which are extremely dangerous to life are present in this equipment. Do not attempt removal of any parts or sub-assemblies or repairs on any portion of this equipment unless all the power is turned OFF. In addition, make use of the grounding hooks when working on any portion of the high-voltage section.

b. SPECIAL PROCEDURES.

(1) RESISTOR REMOVAL. - The large resistors (figure 6-12) are mounted in clips and held in place by means of lock springs. To remove these resistors:

(a) Flip one lock spring up and push it all the way back until that end of the resistor pops out of the end clip.

(b) Holding on to the free end of the resistor, repeat the above procedure and remove the resistor.

(2) VACUUM TUBES V1 THROUGH V12 REMOVAL.

(a) Unscrew the filament wires from their connecting terminals. (See figure 6-9.)

(b) Using both hands, carefully pull the tube from its spring-loaded socket.

CAUTION

Exercise extreme care when handling these tubes to avoid glass breakage. Use padded gloves when removing or installing tubes.

(3) FUSE REMOVAL. - Figure 6-13 shows the two methods of fuse mounting employed in the power supply. Remove fuses as follows:

(a) METHOD 1. - Unscrew and remove clamps and pull fuse from its spring clamps.

(b) METHOD 2. - To remove, merely pull fuse from spring clamps.

(4) CIRCUIT BREAKER CB1 REMOVAL. - To remove CB1 from the left cabinet section, proceed as follows:

(a) Remove terminal board cover plate from motor operator (figure 5-1) and remove and tag all leads to the motor operator and the circuit breaker.

(b) Remove two nuts, lockwashers, and flat washers securing the motor operator to the circuit breaker and remove motor operator.

(c) Remove two bolts from the lower portion of the circuit breaker and two studs from the upper portion and withdraw circuit breaker from its angle-iron frame (figure 6-7).

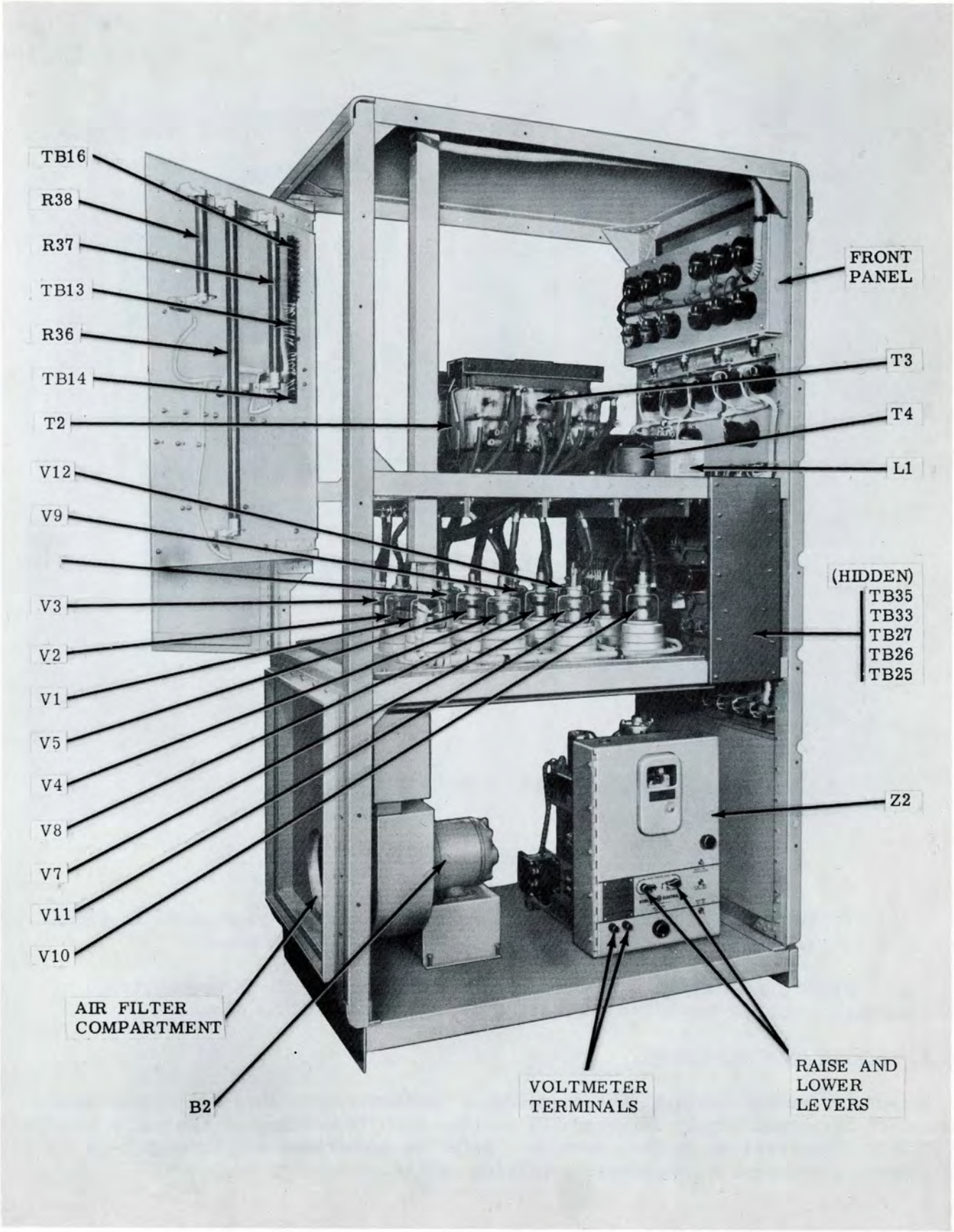

Figure 6-9. Center Cabinet Section, Left Side View

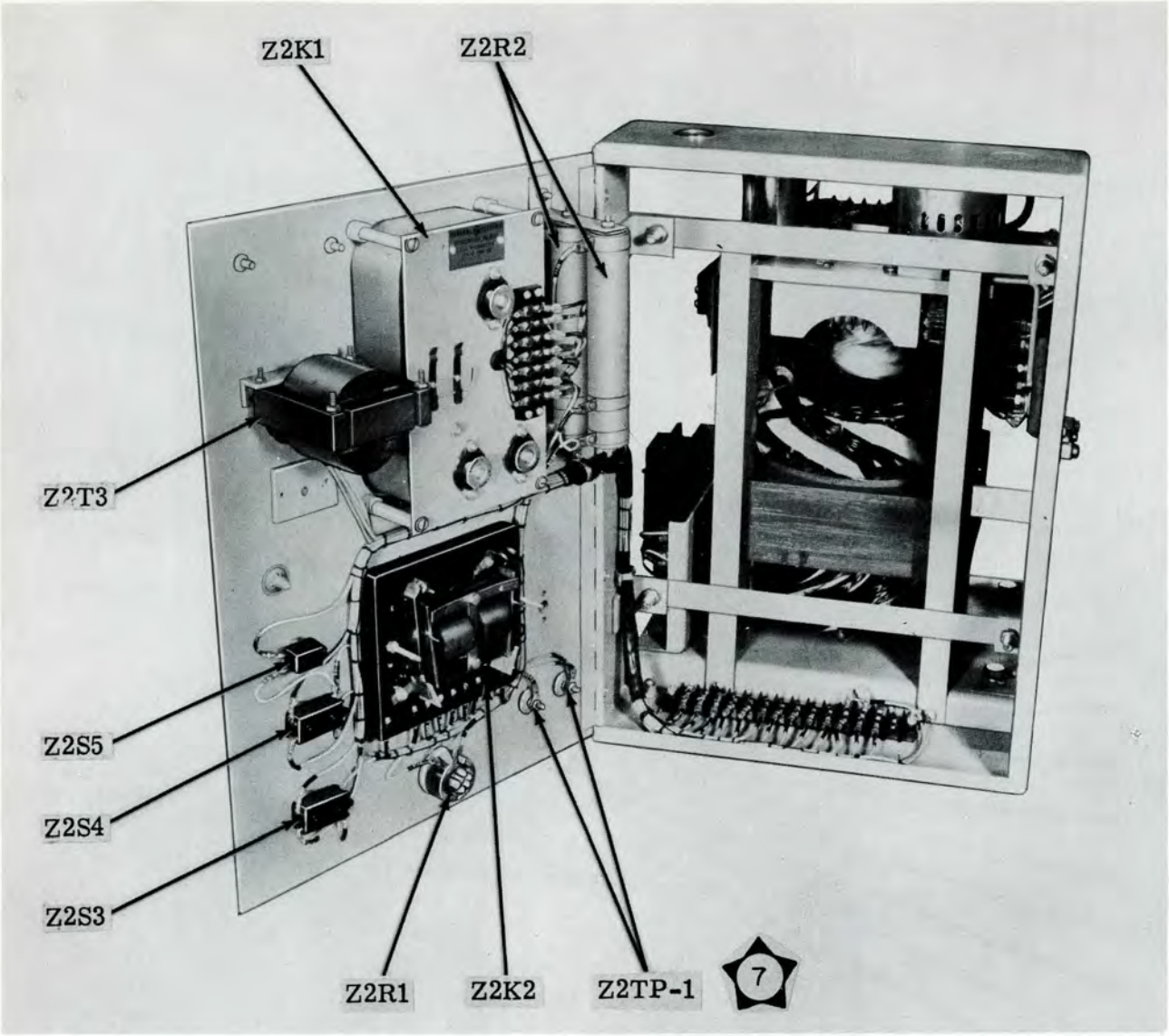

Figure 6-10. Components of Voltage Regulator Z2

(5) VOLTAGE REGULATOR REMOVAL. - Removal of the voltage regulators is accomplished by the handling methods described in Volume 1 of this manual.

(6) PLATE TRANSFORMER. - Removal of plate transformer T1 is accomplished by the handling methods described in Section 2., Volume 1 of this manual.

6-8. DISASSEMBLY AND REPAIR.

Except for certain relays, the disassembly procedure necessary for proper maintenance of the power supply is generally obvious upon inspection of the parts identification illustrations in this section. Refer to paragraphs 6-9 through 6-11 for disassembly and repair procedures requiring special instructions.

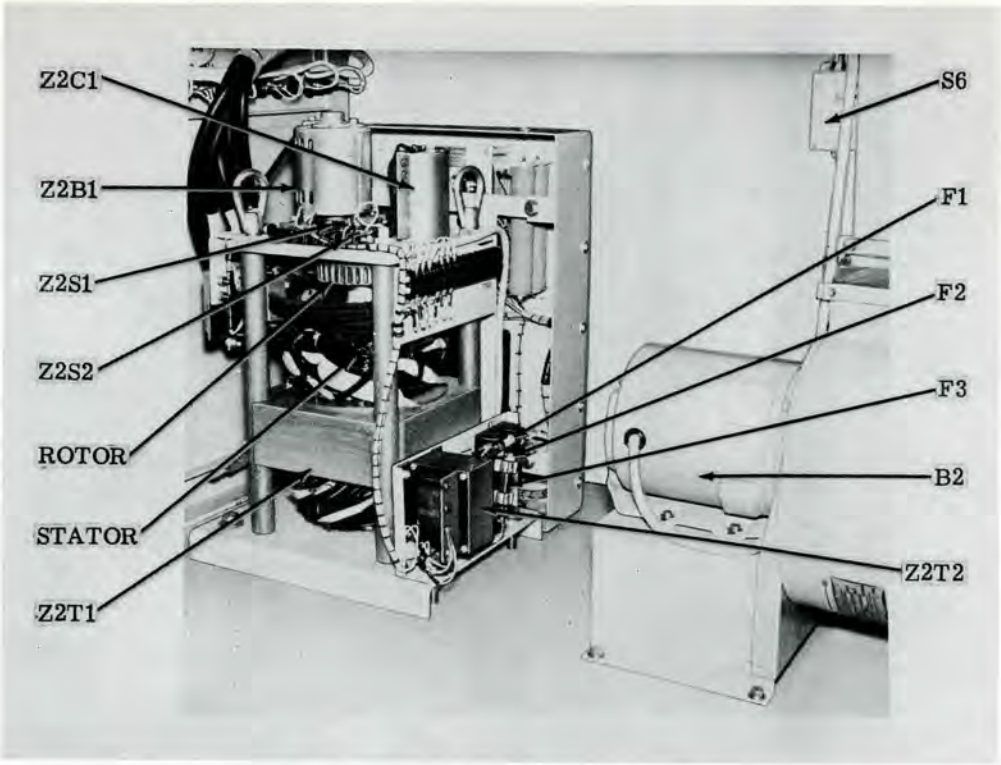

Figure 6-11. Bottom Portion of Center Cabinet Section, Right Side View

6-9. VOLTAGE REGULATOR RELAY REPAIR.

The voltage regulator relay requires a minimum of maintenance. The platinum-iridium contacts should provide long, trouble-free operation. Occasional cleaning of the contacts may be desirable if they become pitted after a long period of operation. It is not necessary to replace the contacts unless they have burned to such an extent that the contact metal has worn through.

NOTE

Before attempting to clean the contacts or disassemble the relay, insert the safety screw into the solenoid core and case to support the core. When inserting the safety screw, support the core with the forefinger to prevent misalignment. With the safety screw in place, the control panel can now be de-energized. The relay should be re-energized before removing the safety screw.

a. REMOVAL OF STATIONARY CONTACTS FROM REGULATOR RELAY (figure 6-15). - The stationary contacts are held by self-locking screws and plates in the pockets of the molded support. These screws, located at the top of the regulator relay and behind the panel are easily reached when the relay cover is removed and the panel swung out. Insert a screwdriver into the self-locking screws and turn in a counterclockwise direction. Remove the contact by pulling straight out from the relay. The other contact can then be removed by the same method.

b. CLEANING CONTACTS. - The surface of the contacts may become dirty or oily, or they may become burned or rough. A separate cleaning procedure is recommended for each case as follows:

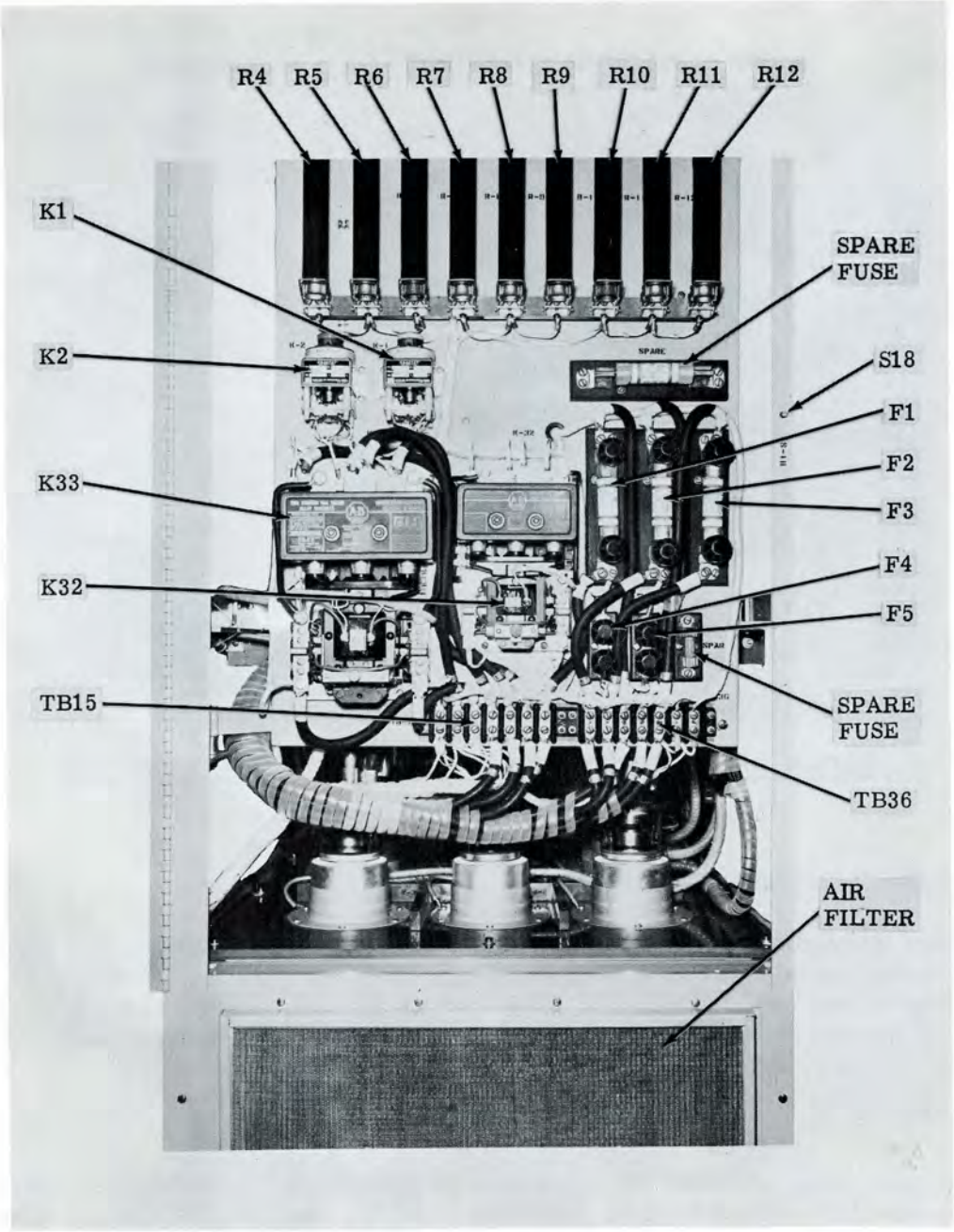

Figure 6-12. Control Panel, Center Cabinet Section, Rear Interior View

(1) DIRTY OR OILY CONTACTS. - Remove dirt or oil by brushing. Then clean with a piece of soft, lint-free cloth or chamois soaked in an approved solvent and supported on a piece of flat metal thin enough to prevent crowding the cleaning instrument between the movable and stationary contacts and thick enough to support the cloth or chamois. Wipe with a clean, dry cloth or chamois, similarly supported, to remove any cleaning solvent deposit.

(2) ROUGH OR BURNED CONTACTS. - Remove the stationary contacts as shown in figure 6-15.

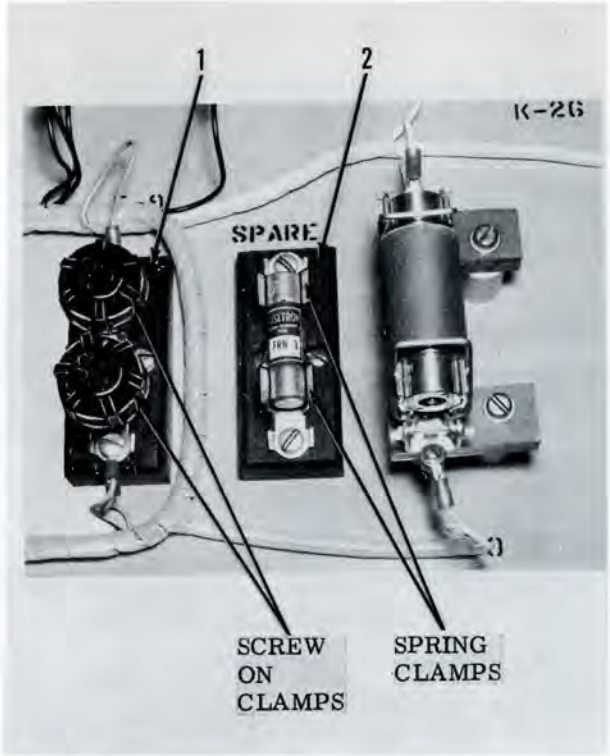

Figure 6-13. Variations in Fuse Mountings

The movable contacts are screwed into the contact beam and should not be removed before the stationary contacts are first removed to give greater accessibility. Support the beam by hand to prevent injury to the pivots when the contacts are turned.

The movable contacts can be serviced while assembled on the contact beam, provided the beam is held so that the pivots are not abused. Smooth the surfaces with a relay contact burnishing tool (usually in the form of thin spring-tool steel roughened by sandblasting) and follow with dry cleaner as directed in paragraph 6-9b.(1). Smooth stationary contacts similarly, but place a spacer between the back of the contact-supporting spring and the contact holder to give solid support to the contact and prevent distortion.

Remove any small surface projections with a fine ignition file. Take care to prevent scratches that cannot be removed entirely by the cleaning tool. Finally, clean with a soft, lint-free cloth or chamois. If perforation of the movable contact metal has occurred, the increased arcing may possibly cause freezing of the contacts. In such cases, replace the contacts.

c. ASSEMBLY OF CONTACTS.- To assemble the movable contacts, hold the beam firmly by hand to prevent injury to the pivots when tightening the contact in the beam.

To assemble the stationary contacts, tighten the locking screws and plate for stationary contacts just sufficiently to overcome looseness. When they are properly tightened, it should be possible to swing the contact holder, or slide it to the front or rear without again adjusting the locking screw and plate for the stationary contacts. Excessive tightening of the locking screw will distort the contact holder and destroy the contact adjustment. Align the contacts as instructed in paragraph 6-6a.(1). (See figure 6-5.)

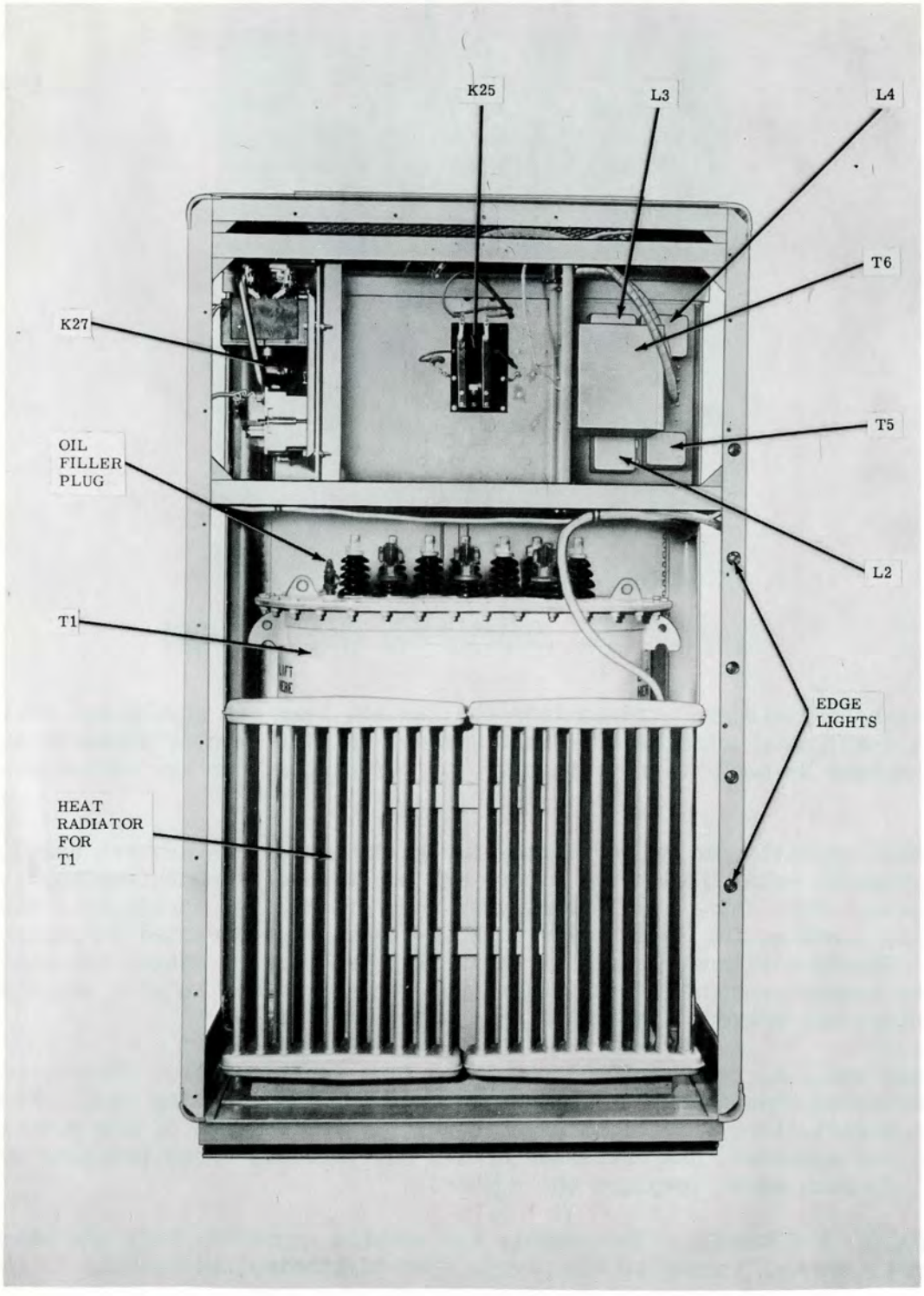

Figure 6-14. Right Cabinet Section,
(Serial No's 1-16) Left Side View

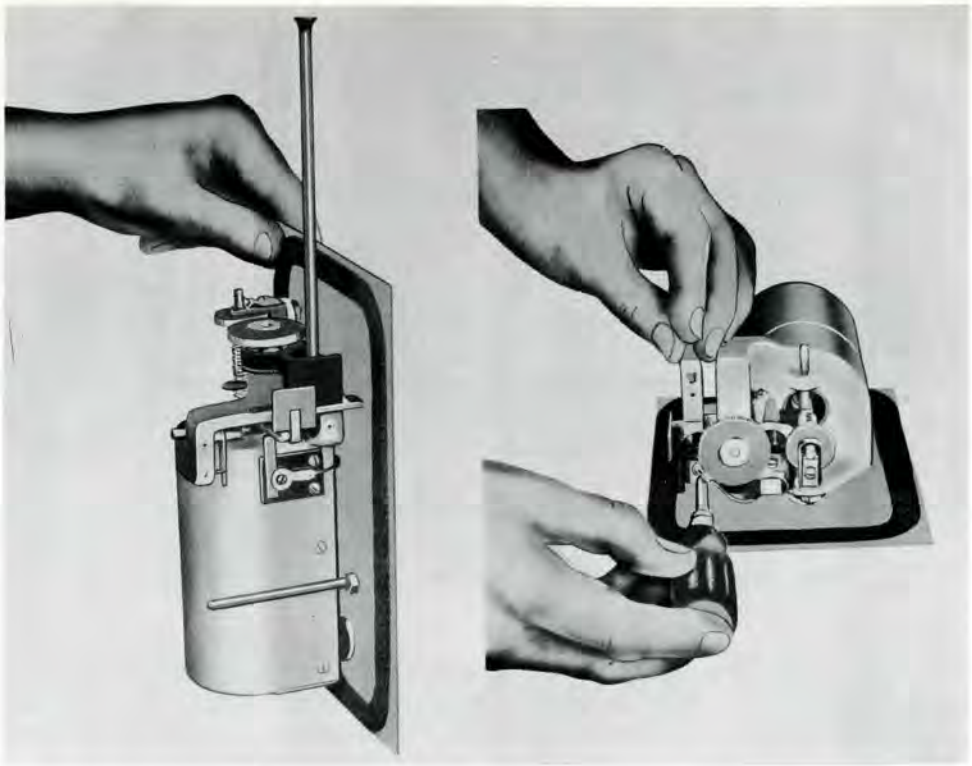

Figure 6-15. Removal of Stationary Contacts

d. SLUGGISH OPERATION. - If the relay becomes sluggish in operation, examine the pivots for binding of the coupling-spring jewels and main contact beam jewels. This condition can be checked quite readily if the applied voltage is reasonably steady. Connect a multimeter to the regulator output; set PLATE VOLTAGE CONTROL switch (52, figure 3-1) in the AUTO position; then joggle the regulator with the RAISE lever until the regulator relay picks up the operation and returns the regulator to its original position. Observe very carefully the voltage of the multimeter at which the regulator relay picks up the operation each time. Repeat, using the LOWER lever. The observed values should be consistently within ±0.1 percent and, if successive trials exceed the total (0.2 percent), friction is probably present. The binding may be due to incorrect pressure on the beam pivots. First check the gap setting of the front pivot-bearing assembly with a feeler gage. The clearance, as shown by B, figure 6-17, should be 0.005 to 0.007 inch. Further checks will require removal of the contact beam assembly (13, figure 4-7) as follows:

(1) Insert the safety screw into the threaded holes in the solenoid core (24) and solenoid case (25), making sure that the screw threads engage in the solenoid core without disturbing the alignment of the front pivot bearing (16), and that the beam lies horizontal, between the two stationary contacts (11). De-energize the control panel by opening the control-power switch.

(2) Unhook the compensating spring (31).

(3) Disconnect the beam shunt connector (17) where it is clamped to the terminal.

(4) Remove the coupling spring clamping screw (30) in the top of the core stem.

(5) Loosen the front pivot bearing setscrew (15) and push the front pivot bearing (16) to the front of the casing as far as it will go. Do not disturb the rear pivot bearing (14). (Wrench for this setscrew is in the clip on the back of the relay base.)

(6) Disengage the beam pivot shaft from the front pivot bearing (16) and remove the beam (13).

The coupling-spring pivot bearings float on springs in the jewel screw assembly (26). To check the tension on these bearings, loosen the locknut (28) without turning the jewel screw assembly. Then turn only one jewel screw until the pivot shaft can just be moved axially without compressing either jewel spring. (See figure 6-16.) The jewel screw should require turning about three-quarters of a turn counterclockwise, when looking at the slotted screw, to allow axial freedom.

The coupling-spring pivot shaft can be removed by backing the jewel screw assembly (26) out far enough to disengage the shaft. Check the pivot points under a 3X magnifying glass. The points should be needle-like and free from cracks and distortion.

To reassemble the coupling spring (30), place the pivot shaft in position and tighten the jewel screw (26) until axial freedom of the shaft is eliminated. Then tighten the jewel screw another one-half turn (clockwise, looking at slotted end) to obtain the correct tension. Secure the jewel screw by tightening the locknut (28), without disturbing the jewel screw assembly adjustment.

NOTE

The position of the coupling spring and its shaft, with respect to the contact beam and its shaft, is located by gage at the factory, and perfect realignment will be assured by disturbing only one jewel screw. This is true even if a renewal part is used. Under no circumstances should the bracket sides of the contact beam be bent to make adjustment of the coupling pivot bearings.

e. FRONT PIVOT-BEARING ASSEMBLY. - Binding of the contact beam can be caused by incorrect pressure on the beam pivot shaft. Before installing the contact beam, complete the following checks:

(1) Check the pivot points for damage as explained above for the coupling-spring pivots.

(2) Check the front pivot-bearing assembly in accordance with A, figure 6-17, and then assemble in the bracket with the beam in accordance with B, figure 6-17, using a feeler gage to check for proper clearance (tolerance 0.005 to 0.007 inch).

f. ASSEMBLY OF CONTACT BEAM (figure 6-16). - Follow the reverse order of procedure outlined in paragraph 6-9a. Check the position of the front pivot bearing and its support before and after assembly to insure alignment and proper end thrust. [Broken line (figure 6-16) shows the pivot shaft axial movement to be checked when adjusting the tension on the pivot bearing.]

After tightening the coupling-spring clamping screw, back it off very slightly in order to relieve any tendency to turn the coupling spring from its normal position.

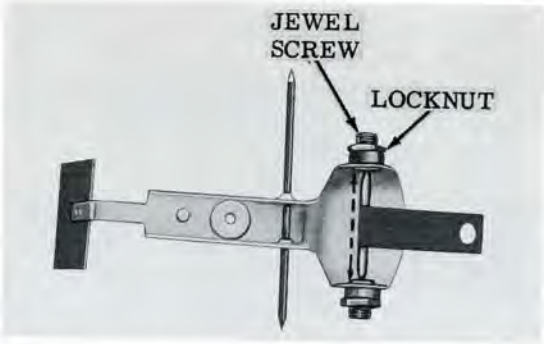

Figure 6-16. Contact Beam Assembly

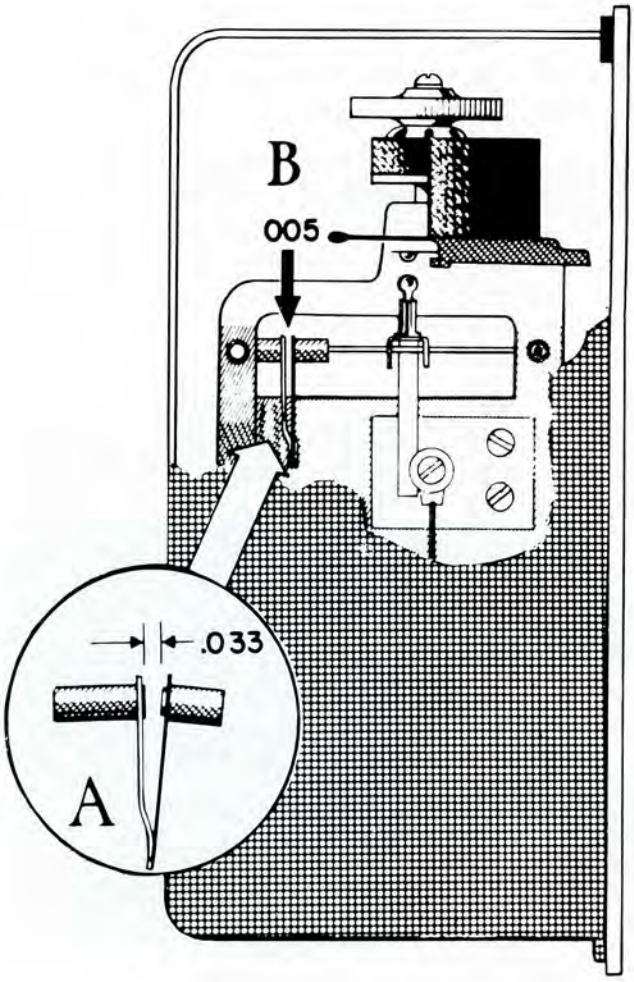

Figure 6-17. Front Pivot-Bearing Adjustment

g. TESTING REGULATOR RELAY COILS. - Before testing the regulator relay coils, insert the safety screw into the solenoid core and case to support the core, and de-energize the control circuit by opening the control-power switches. Disconnect all of the external connections from the terminal board terminals 24, 25, 26, and 27 on the back of the relay. (See figure 6-4.)

Since the currents drawn by these coils are very small, it is recommended that the coils be tested by resistance measurements. The main solenoid coil resistance, as measured between studs 24 and 25, should be approximately 10 ohms. The resistance of the holding coil, as measured between studs 26 and 27, should be approximately 5.5 ohms. All values given are at 77.0°F (25.0°C).

6-10. MOTOR CONTROL RELAY REPAIR.

The motor control relay, located on the rear of the control panel, is controlled by the contacts of the regulator relay through two operating coils, each consisting of a main winding with a tapped section. (See figure 6-18.) The tapped section provides power for the holding coil of the regulator relay the instant the main winding is energized. The silver-to-silver contacts of the relay control the operation of the drive motor to raise or lower the voltage on the output side of regulator T1.

Two levers on the front of the panel manually operate the relay contacts to close the motor circuit, providing manual control of the voltage regulator.

a. INSPECTION. - The motor control relay should be inspected for any damage in transit before the regulator is energized. To inspect the relay, remove the molded cover (1, figure 6-19) by loosening the two knurled knobs on the front of the cover and removing the cover from the relay. Operate the contacts with the manual RAISE and LOWER levers (22) on the front of the control panel to see that they operate freely. If the operation is not free, check the relay in accordance with instructions in the following paragraph.

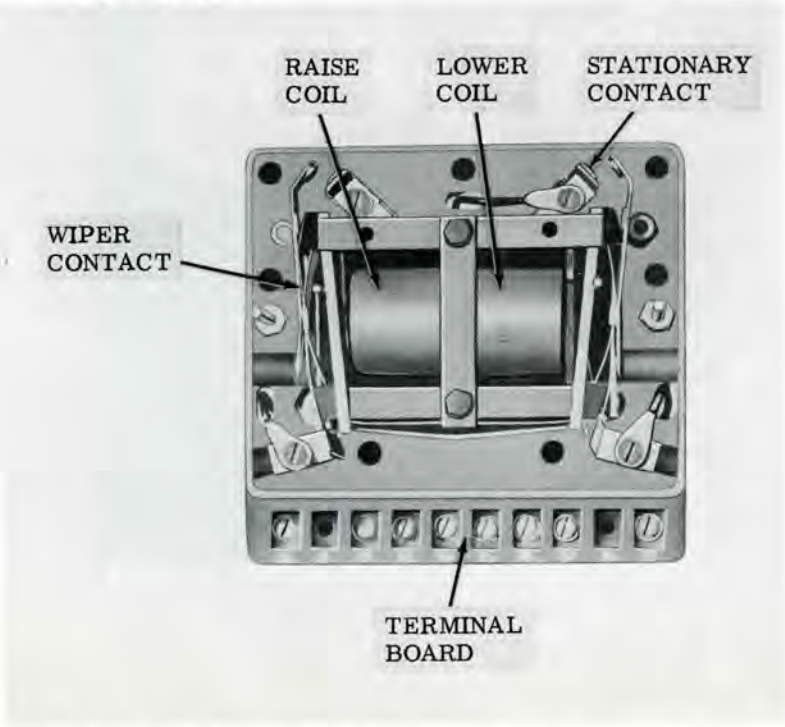

Figure 6-18. Motor Control Relay, Rear View

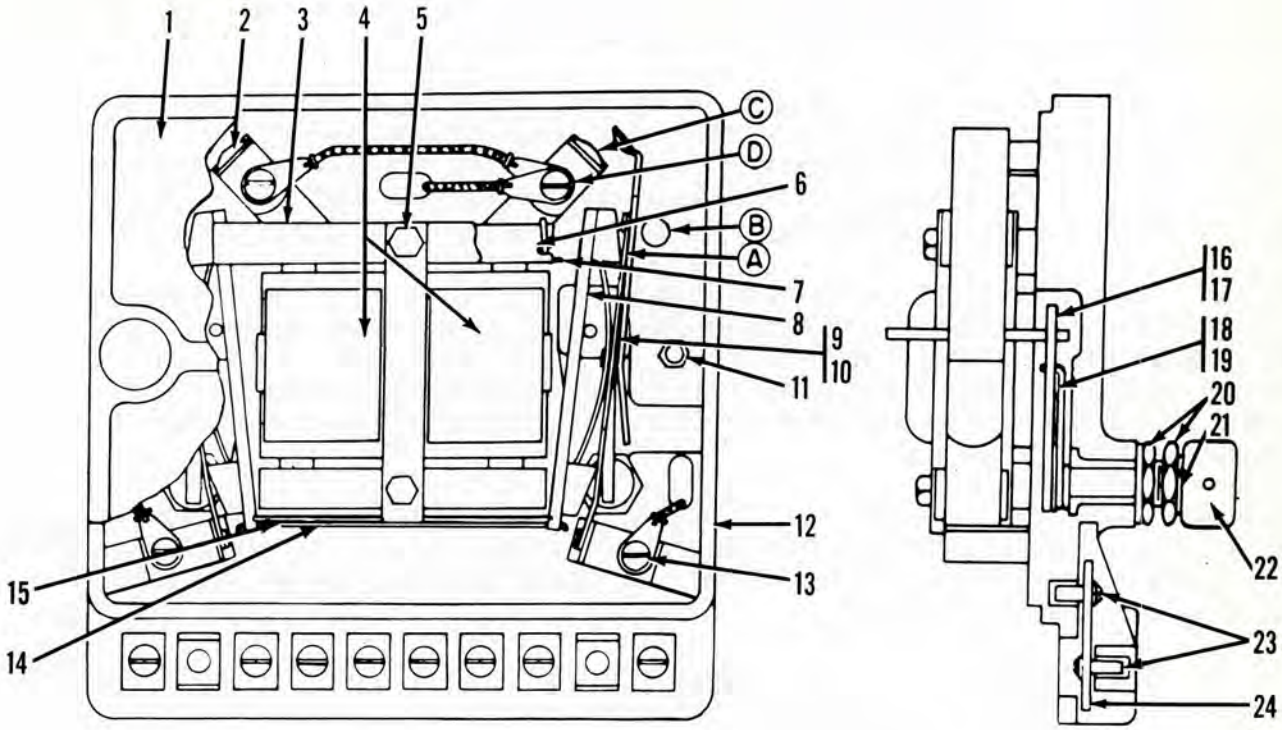

1 Molded cover
2 Stationary contacts
3 Armature guard
4 Operating coils, 120 volts, 60 cycles
5 Holding screws for magnet core
6 Magnet core and pole shader
7 Mechanical armature interlock
8 Armature assemblies
9 Movable-contact assembly (left-hand)
10 Movable-contact assembly (right-hand)
11 Holding screws for cover
12 Molded base
13 Holding screws for movable contacts
14 Armature spacer
15 Armature tie link
16 Lever and shaft assembly (right-hand)
17 Lever and shaft assembly (left-hand)
18 Spring (right-hand)
19 Spring (left-hand)
20 Hex nuts
21 Retaining rings
22 Manual RAISE and LOWER levers
23 Screws for 24
24 Terminal straps

Figure 6-19. Motor Control Relay, Sectional View

b. MAINTENANCE. - The motor control relay is provided with silver-to-silver contacts. It is not necessary to replace the contacts or clean them if they show only discoloration resulting from the normal effect of arcing. The wiping action, in making contact, will keep the actual contact surface clean and insure a good electric contact. The contacts should be replaced when the contact face material is burned away and there is no longer any wiping action.

(1) SERVICING OF RELAY CONTACTS. - The contacts will become discolored from service. This is a natural process where silver-to-silver contacts are used. This discoloration will do no harm provided arcing does not continue after contact is made. Arcing in the presence of noxious gases or salt air will cause deposits to form on contact surfaces which may eventually interfere with proper circuit closing.

(2) CARE OF CONTACTS. - To clean the contacts, use a piece of spring-tool steel that has been sandblasted or etched to form a very fine, rough surface. After cleaning, brush the contact with a clean, dry toothbrush. If a gummy deposit is present on the contact, first brush with a clean toothbrush moistened with an approved solvent, allow to dry, then brush with a clean, dry toothbrush before cleaning with the cleaning tool.

In most cases, the cleaning tool will remove the roughened surfaces, but if the contacts have become pitted, a fine ignition file may be used to clean up the pits. Stroke the contacts in the direction of the "wipe" and then finish off as above with cleaning tool and toothbrush.

(3) ADJUSTMENT OF CONTACTS. - Continued arcing after contacts are closed may indicate dirty contacts, or improper adjustment due to wear, causing insufficient pressure to close the circuit properly.

The trouble may be readily ascertained by exerting pressure against the armature (8, figure 6-19) until the contacts close, and observing the contact "wipe". If a good "wipe" is indicated then the contacts should be cleaned as directed in paragraph 6-10b.(2). If no noticeable "wipe" is observed, the contacts should be readjusted as follows:

(a) Release the armature (8) and allow the contacts to open. The movable contact support (A) should rest against the molded stop (B) in the base with a very light pressure to prevent bouncing of the armature assembly when the contacts open. To obtain the proper pressure, loosen screw (13) very slightly and exert sufficient pressure against the end of the bracket under the screw to force the bracket toward the core until the contact support (A) just clears the molded stop (B). Then move the bracket back slightly, at the same time pressing upward on the bracket at the point where the contact assembly is welded to it, until the contact support (A) just touches the molded stop (B). Tighten the bracket screw (13).

(b) Insert a 1/16-inch-diameter pin (or a piece of bare No. 14 B & S solid wire) in the top edge of the top armature gap at the right-hand end of the core, and exert pressure directly against the center of the armature (not against the contact assembly) to hold it firmly against the gage. Move the stationary contact (C) in its slot in the base until it just touches the movable contact. Tighten holding screw (D) firmly.

(c) Adjust the left-hand contacts in the same manner.

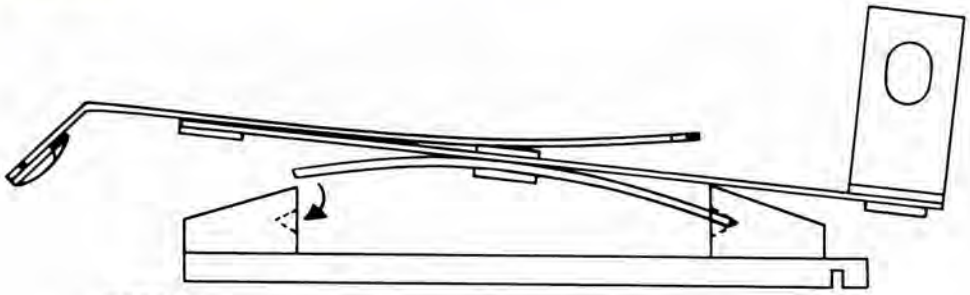

NOTE:
TO ASSEMBLE, HOOK SPRING IN SLOT AS SHOWN BY CURVED ARROW.

Figure 6-20. Motor Control Relay, Contact Assembly

c. TESTS. - After the contacts have been adjusted, the motor control relay should, if possible, be checked for minimum operating or pickup voltage. The relay should operate positively at a voltage not exceeding 80 percent of the voltage specified on the nameplate. However, if a variable voltage is not available, it may be assumed that if the adjustments outlined above have been made correctly and the relay operates quietly, the pickup value should be nearly correct.

d. REPLACEMENT OF CONTACTS. - The wiring of the movable contacts (9 and 10, figure 6-19) and stationary contacts (2) should be uniform and, in most cases, both the movable and stationary contacts will require replacement at the same time.

Each movable-contact assembly consists of three flat springs and a silver contact welded together. See figure 6-20 which shows the contact assembly and the method of assembling the movable-contact assembly to the armature.

Before starting to assemble the contacts, the surface of the armature and magnet core should be thoroughly cleaned of all foreign material. This may be accomplished by using a clean toothbrush moistened with an approved solvent. When the surfaces are dry, brush again with a clean, dry toothbrush.

(1) Remove the right- and left-hand movable-contact and armature assemblies from the relay base by removing holding screws (13, figure 6-19).

(2) Remove the armatures from the movable-contact unit by holding the contact unit at the center of the bridge spring (figure 6-20), and pulling the armature straight out and away from the bridge spring.

(3) Assemble the armatures to the new contact assembly with the slot at the bottom. Assemble the bottom end of the bridge spring into the recess in the bottom insulator on the armature and then flex the top end and assemble into the recess in the top insulator. Check carefully to see that the end of the bridge spring sets squarely in the recess in the insulators.

(4) Assemble the movable-contact assembly (9, figure 6-19) into the groove in the relay base with the holding screw (13) loose for adjustment. Insert the armature spacer (14) into the slot near the lower end of the armature. Hold the top of the armature tight against the magnet-core pole-face by applying pressure against the center of the armature and not against the contact assembly. Make sure the armature spacer (14) is seated squarely in the bottom of the slot and the front edge of the armature is approximately parallel with the front surface of the core, as

determined by the matching of the relay contacts; then tighten holding screw (13) firmly. Release pressure from the armature and check to make sure that the armature spacer (14) is exerting pressure against the armature and that there is a very small gap between the bottom end of the armature and the bottom pole-face of the core.

After assembling one of the movable-contact assemblies on the base as described above, insert one end of the armature tie link (15) through the hole in the bottom end of the armature (8) already assembled; then insert the other end of the tie link through the corresponding hole in the other armature and assemble this movable-contact assembly in place in the same manner as indicated above.

Adjust the contacts as described in paragraph 6-10b.(3).

e. REPLACEMENT OF COILS. - To replace the coils, it is necessary to remove the motor control relay from the control panel. To do this, loosen the hex socket head screws holding the manual RAISE and LOWER levers (22, figure 6-19) on the shafts projecting through the panel, and remove the levers. Disconnect the panel wiring from the relay and remove the mounting nuts on the shaft bushings on the front of the panel.

Remove the armature and contact assemblies from the base, disconnect the coil leads, and remove the two hex head screws that hold the magnet core (6), armature spacer (14), and nameplate to the base (12). Remove the magnet core and coils as a unit. Carefully note the position of the coil leads with respect to the core before removing the coils (4) from the core, so that the same arrangement of leads may be followed in assembling the new coils to the core. The replacing coils will have four leads. Only three leads will be used.

The right-hand or lowering coil should have the yellow lead cut off about 1/4 inch from the coil. The left-hand or raising coil should have the white lead cut off in the same manner. Place the new coils on the legs of the core and reassemble the magnet, coils, armature spacer, and nameplate to the relay base. In assembling this unit to the base, make sure that the coil leads do not interfere with the full operation of the armature interlock. Connect the coil leads to the terminals in the base in accordance with figure 6-21. Identify the leads by their color. Reassemble the armature and movable-contact assemblies. Adjust the contacts as described in paragraphs 6-10d. and 6-10b.(3).

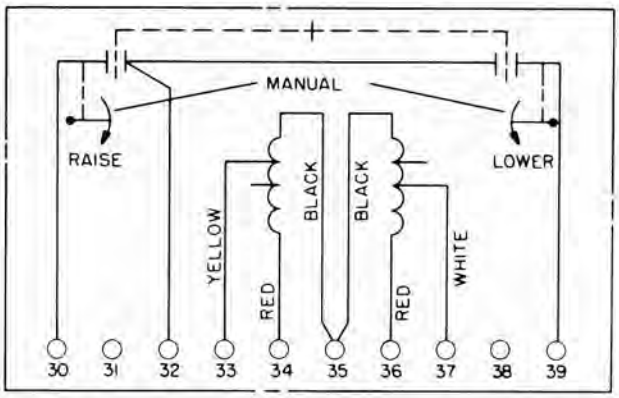

Figure 6-21. Motor Control Relay, Rear View, Wiring Diagram

f. TESTING COILS. - To test the motor control relay coils, first disconnect all external connections from the terminals at the bottom of the relay base.

Since the steady-state current drawn by the coils of the motor control relay is only about 25 milliamperes at 120 volts, it is recommended that resistance readings be used in testing these coils. Resistance [at 77.0°F (25.0°C)] should be as follows:

Terminal 35 to 34 = 640 ohms ±5%
Terminal 35 to 36 = 640 ohms ±5%
Terminal 35 to 33 = 47 ohms ±10%
Terminal 35 to 37 = 70 ohms ±10%

6-11. REPAIR OF RELAYS K27 THROUGH K34.

Except for minor differences in contact arrangement and variations in physical size, relays K27 through K34 are generally similar in appearance and construction. The contacts used in these relays are of a special alloy and do not require any maintenance. Replace any contact which becomes perforated or broken. The disassembly of relays K27 through K34 is generally obvious upon inspection of their identifying illustrations. (See figures 6-23 through 6-26.)

6-12. VARIABLE TRANSFORMERS T7 AND T8, BRUSH REPLACEMENT (figure 6-22).

a. Inspect brush for proper contact before replacement is attempted.

b. To replace brush, snap out old brush and snap in new brush.

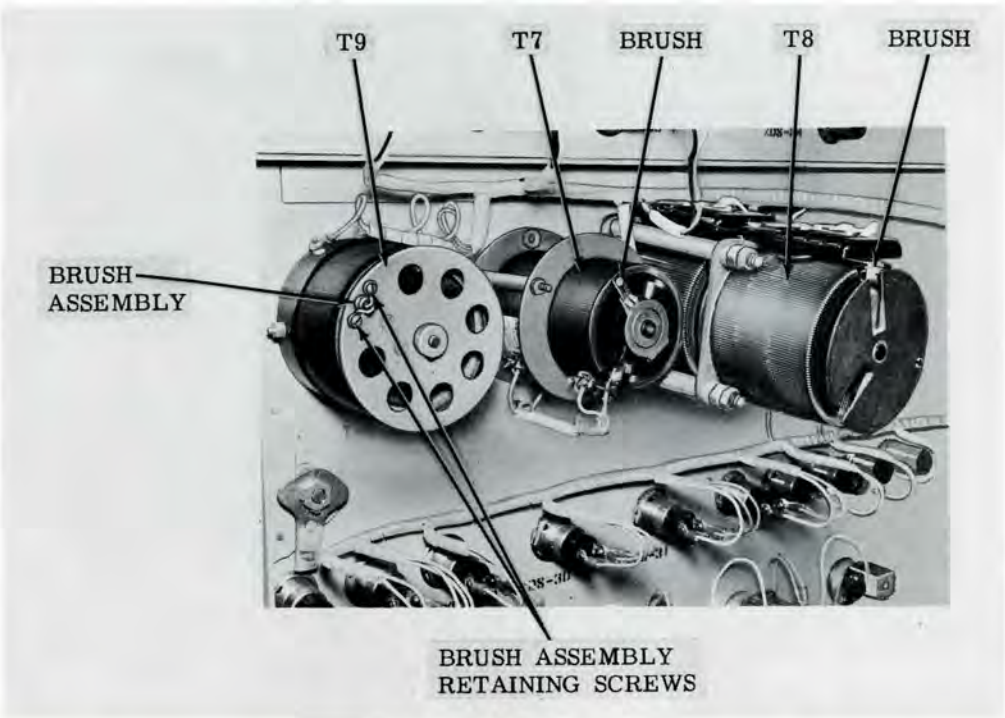

Figure 6-22. Variable Transformers T7, T8, and T9, Brush Locations

6-13. VARIABLE TRANSFORMER T9, BRUSH REPLACEMENT (figure 6-22).

a. Remove two screws; then remove brush assembly.

b. Insert new brush assembly and replace the two screws.

6-14. CIRCUIT BREAKER CB1, MOTOR OPERATOR REPLACEMENT.

a. Remove terminal board cover plate from circuit breaker (figure 5-1).

b. Place the circuit breaker in the "OFF" latched position.

c. Place hand crank on hand crank shaft and rotate shaft fully clockwise.

d. Position motor operator over the circuit breaker operating handle and mount on protruding ends of circuit breaker mounting studs.

e. Secure in position using flat washer, lockwasher, and nut on each stud.

f. Connect leads as previously tagged to terminal board or wire in accordance with wiring diagram located on the underside of terminal board cover plate.

g. Replace terminal board cover plate.

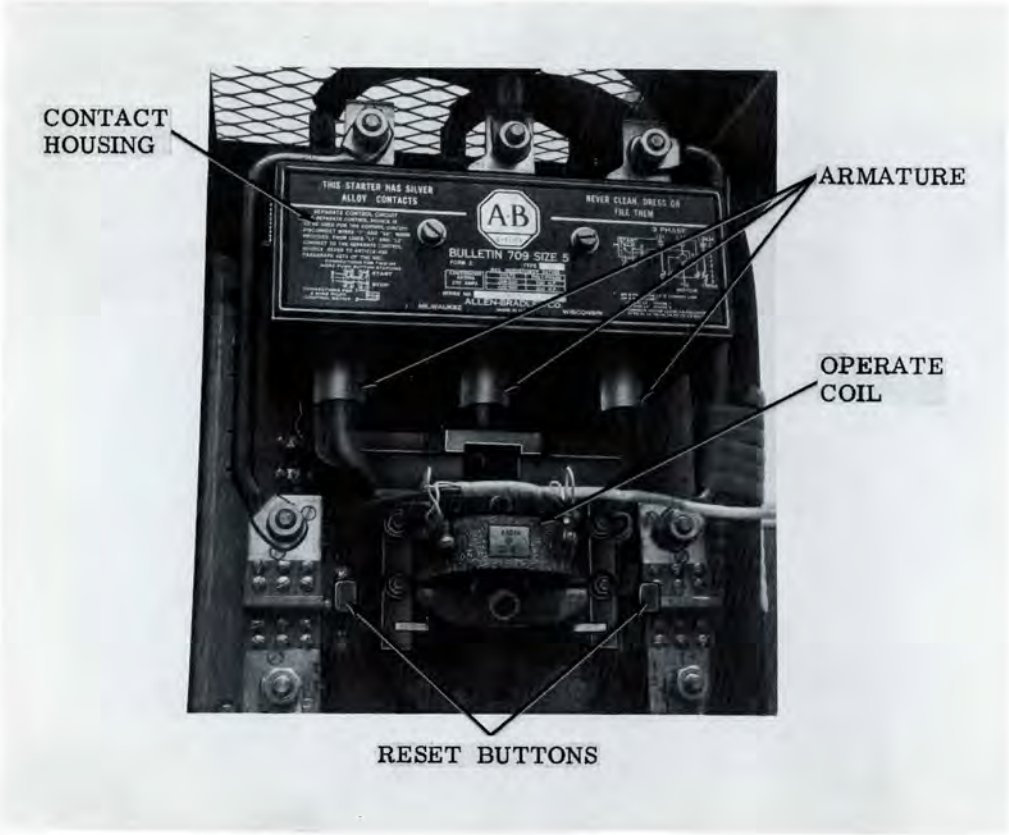

Figure 6-23. Plate Relay K27

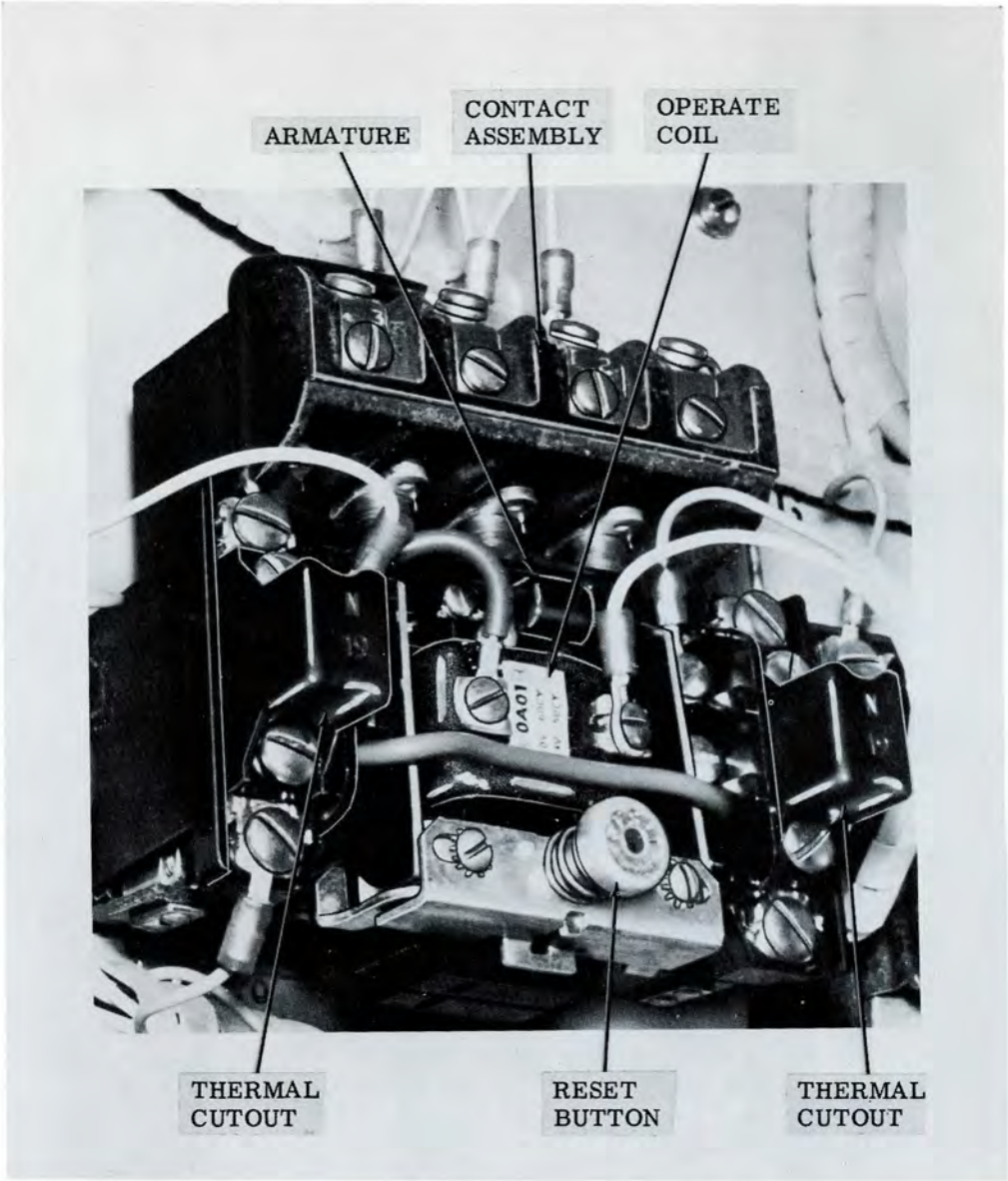

Figure 6-24. Bias Relay K34

6-15. GENERAL REPAIR.

Except for the specific instructions in paragraphs 6-9 through 6-14, the maintenance of the power supply is confined to replacement of defective components. See the parts identification figures in this section and refer to Section 7 for the list of maintenance parts.

6-16. OVERALL SCHEMATIC DIAGRAM.

Figure 6-27 is the overall schematic diagram of the power supply. See figure 4-5 for the schematic of Z1 and figure 4-6 for the schematic of Z2.

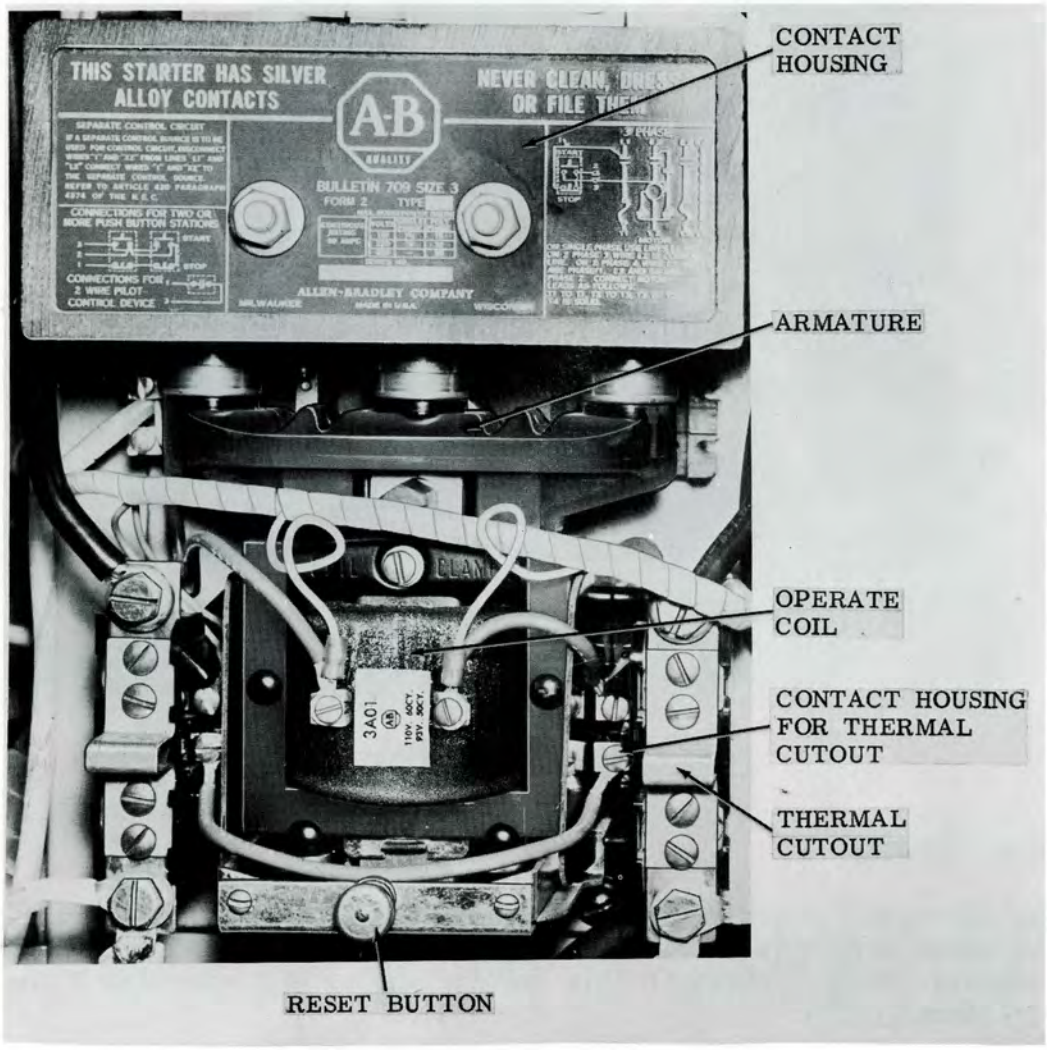

Figure 6-25. Full Filament Relay K33

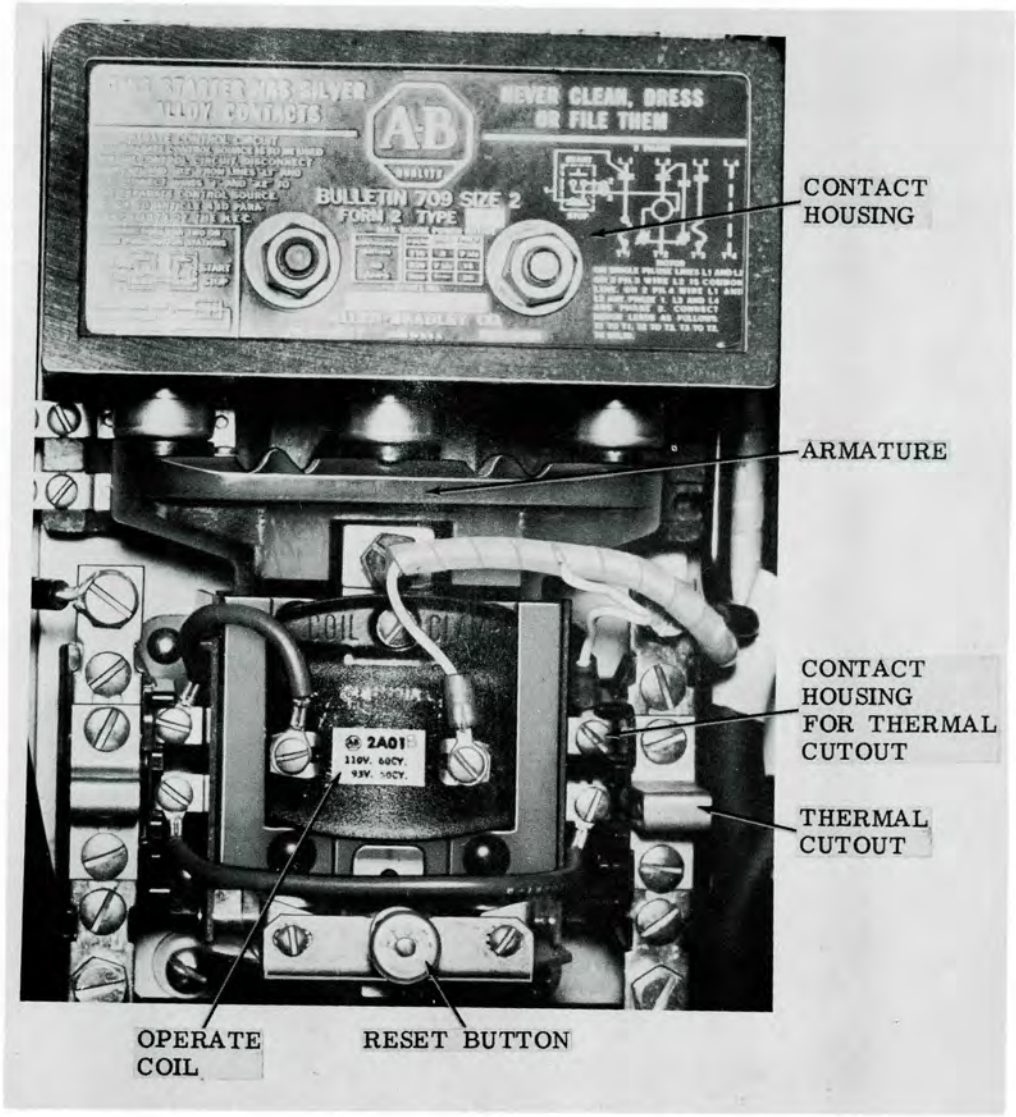

Figure 6-26. Initial Filament Relay K32

Figure 6-27. Power Supply FP-2540/FPM-42 Overall Schematic Diagram (Sheet 1 of 2)

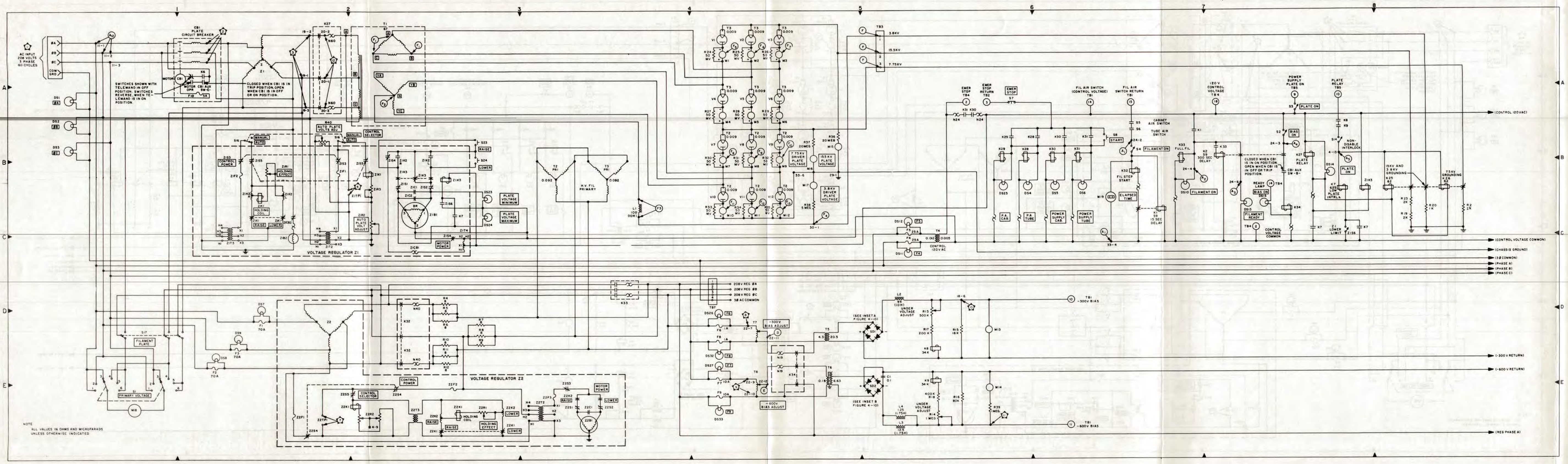

Figure 6-27. Power Supply PP-2540/FPN-42, Overall Schematic Diagram (Sheet 1 of 2)

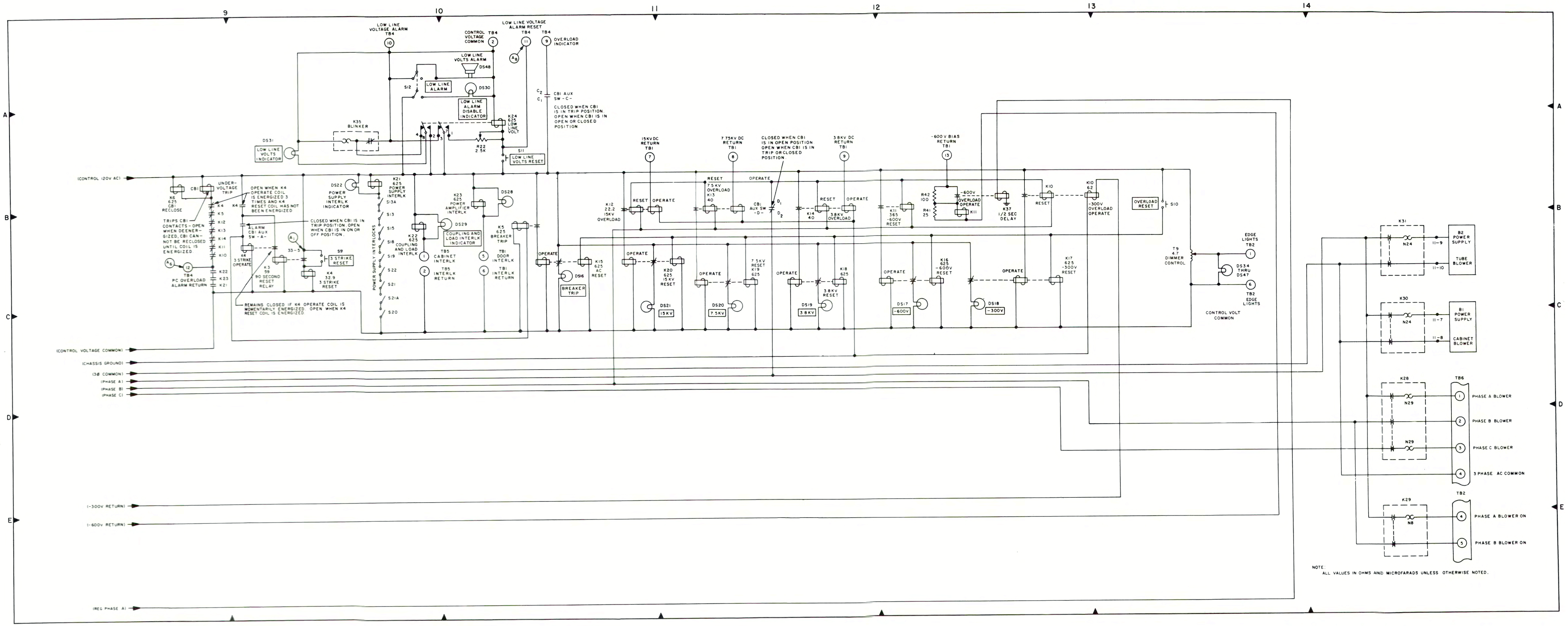

Figure 6-27. Power Supply PP-2540/FPN-42, Overall Schematic Diagram (Sheet 2 of 2)

TABLE OF LOCATION AND VALUE OF COMPONENTS FOR FIGURE 6-27

REFERENCE DESIGNATION	VALUE (ohms)	LOCATION	
		AREA	SHEET
B1	-	C14	2
B2	-	B14	2
C1	-	E5	1
CB1	-	A1	1
DS1	-	A1	1
DS2	-	B1	1
DS3	-	B1	1
DS4	-	C6	1
DS5	-	C6	1
DS6	-	C6	1
DS7	-	D1	1
DS8	-	E1	1
DS9	-	D1	1
DS10	-	C7	1
DS11	-	C5	1
DS12	-	C5	1
DS13	-	C7	1
DS14	-	B8	1
DS15	-	C7	1
DS16	-	C11	2
DS17	-	C12	2
DS18	-	C13	2
DS19	-	C12	2
DS20	-	C11	2
DS21	-	C11	2
DS22	-	B2	2
DS23	-	C3	1
DS24	-	C3	1
DS25	-	C6	1
DS26	-	D4	1
DS27	-	E4	1
DS28	-	B10	2
DS29	-	B10	2
DS30	-	A10	2
DS31	-	B9	2
DS32	-	E4	1
DS33	-	E4	1
DS34	-	C14	2
DS35	-	C14	2
DS36	-	C14	2
DS37	-	C14	2
DS38	-	C14	2
DS39	-	C14	2
DS40	-	C14	2
DS41	-	C14	2
DS42	-	C14	2
DS43	-	C14	2
DS44	-	C14	2
DS45	-	C14	2
DS46	-	C14	2

TABLE OF LOCATION AND VALUE OF COMPONENTS FOR FIGURE 6-27 (Cont)

REFERENCE DESIGNATION	VALUE (ohms)	LOCATION	
		AREA	SHEET
DS47	-	C14	2
DS48	-	A10	2
F1	70 amps	D1	1
F2	70 amps	E1	1
F3	70 amps	E1	1
F4	25 amps	C5	1
F5	25 amps	C5	1
F6	1 amp	D4	1
F7	10 amps	E4	1
F8	1 amp	D4	1
F9	10 amps	E4	1
F10	5 amps	A1	1
K1	59 ±10%	C7	1
K2	59 ±10%	B7	1
K3	59 ±10%	C9	2
K4	32.9	B9	2
K5	625	B10	2
K6	625	B9	2
K7	625	C8	1
K8	34,000	E5	1
K9	34,000	E5	1
K10	62	B13	2
K11	365	B12	2
K12	22.2	B11	2
K13	40	B11	2
K14	40	B12	2
K15	625	C11	2
K16	625	C12	2
K17	625	C13	2
K18	625	C12	2
K19	625	C11	2
K20	625	C11	2
K21	625	B10	2
K22	625	B10	2
K23	625	B10	2
K24	625	A10	2
K25	62	C8	1
K26	62	C8	1
K27	-	B7	1
K28	-	B6	1
K29	-	B6	1
K30	-	B6	1
K31	-	B6	1
K32	-	C6	1
K33	-	B7	1
K34	-	C7	1
K35	-	A10	2
K37	-	B13	2
L1	100	C4	1
L2	95	D5	1

TABLE OF LOCATION AND VALUE OF COMPONENTS FOR FIGURE 6-27 (Cont)

REFERENCE DESIGNATION	VALUE (ohms)	LOCATION	
		AREA	SHEET
L3	12.5	E5	1
L4	-	E5	1
M1	1000/volt	A4	1
M2	1000/volt	A4	1
M3	1000/volt	A4	1
M4	1000/volt	B4	1
M5	1000/volt	B4	1
M6	1000/volt	B4	1
M7	1000/volt	B4	1
M8	1000/volt	B4	1
M9	1000/volt	B4	1
M10	1000/volt	C4	1
M11	1000/volt	C4	1
M12	1000/volt	C4	1
M13	1000/volt	D6	1
M14	1000/volt	E6	1
M15	1000/volt	B5	1
M16	1000/volt	B5	1
M17	1000/volt	B5	1
M18	1000/volt	E1	1
M19	-	C6	1
R4	8 ±5%	D3	1
R5	8 ±5%	D3	1
R6	8 ±5%	D3	1
R7	8 ±5%	D3	1
R8	8 ±5%	D3	1
R9	8 ±5%	D3	1
R10	8 ±5%	E3	1
R11	8 ±5%	E3	1
R12	8 ±5%	E3	1
R13	500,000 ±10%	D5	1
R14	1,000,000 ±10%	E5	1
R15	18,000 ±5%	D5	1
R16	80,000 ±5%	E5	1
R17	200,000 ±5%	D5	1
R18	400,000 ±5%	E5	1
R19	2,000 ±5%	C8	1
R20	1,000 ±5%	C8	1
R21	2,000 ±5%	C8	1
R22	2,500 ±5%	A10	2
R23	2,000 ±5%	C8	1
R24	-	A4	1
R25	-	A4	1
R26	-	A4	1
R27	-	A4	1
R28	-	A4	1
R29	-	A4	1
R30	-	B4	1
R31	-	B4	1

TABLE OF LOCATION AND VALUE OF COMPONENTS FOR FIGURE 6-27 (Cont)

REFERENCE DESIGNATION	VALUE (ohms)	LOCATION	
		AREA	SHEET
R32	-	B4	1
R33	-	C4	1
R34	-	C4	1
R35	-	C4	1
R36	20,000,000 ±0.5%	B5	1
R37	20,000,000 ±0.5%	B5	1
R38	5,000,000 ±0.5%	C5	1
R39	1,000,000 ±0.5%	E6	1
R40	150	B2	1
R41	25	B12	2
R42	100	B12	2
S1	-	E1	1
S2	-	B7	1
S3	-	A7	1
S4	-	B6	1
S5	-	B6	1
S6	-	B6	1
S7	-	A6	1
S8	-	B6	1
S9	-	C10	2
S10	-	B13	2
S11	-	A10	2
S12	-	A10	2
S13	-	B10	2
S13A	-	B10	2
S14	-	B8	1
S15	-	B10	2
S16	-	B1	1
S17	-	D1	1
S18	-	B10	2
S19	-	C10	2
S20	-	C10	2
S21	-	C10	2
S21A	-	C10	2
S22	-	C10	2
S23	-	B3	1
S24	-	B3	1
SD1	-	D5	1
SD2	-	E5	1
T1	67	A2	1
T2	PRI 0.092 SEC 0.009	B3 B4	1 1
T3	PRI 0.092 SEC 0.009	B3 A4	1 1
T4	PRI 0.012 SEC 0.005	C5	1

TABLE OF LOCATION AND VALUE OF COMPONENTS FOR FIGURE 6-27 (Cont)

REFERENCE DESIGNATION	VALUE (ohms)	LOCATION	
		AREA	SHEET
T5	PRI 4.3 SEC 20.5	D5	1
T6	PRI 0.18 SEC 6.63	E5	1
T7	-	D4	1
T8	-	E4	1
T9	4.7	C13	2
V1	-	A4	1
V2	-	A4	1
V3	-	A4	1
V4	-	A4	1
V5	-	A4	1
V6	-	A4	1
V7	-	B4	1
V8	-	B4	1
V9	-	B4	1
V10	-	C4	1
V11	-	C4	1
V12	-	C4	1
Z1	-	C2	1
Z2	-	E3	1

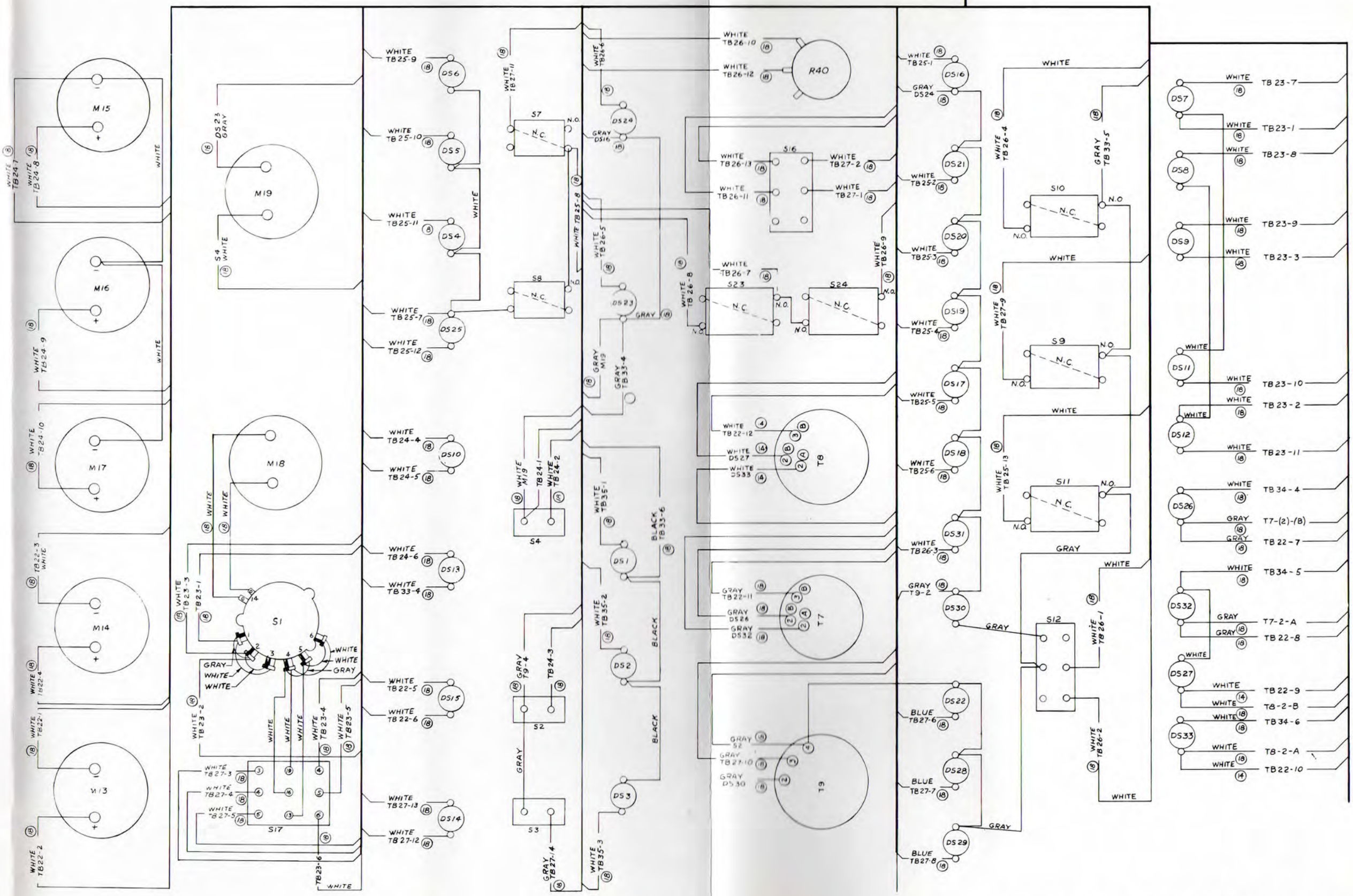

Figure 6-28. Center Cabinet Front Panel, Wiring Diagram

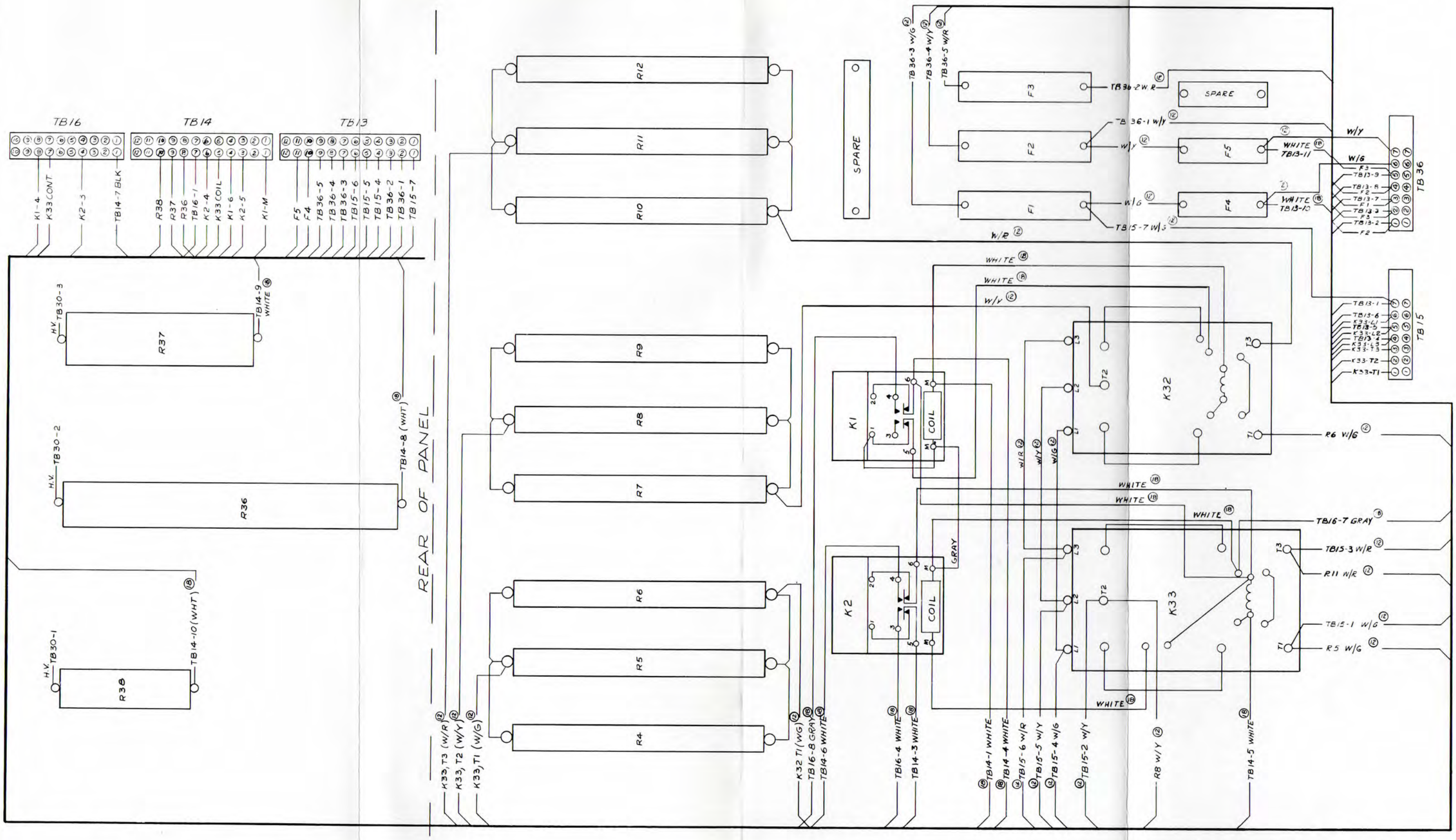

Figure 6-29. Center Cabinet Rear Panel, Wiring Diagram

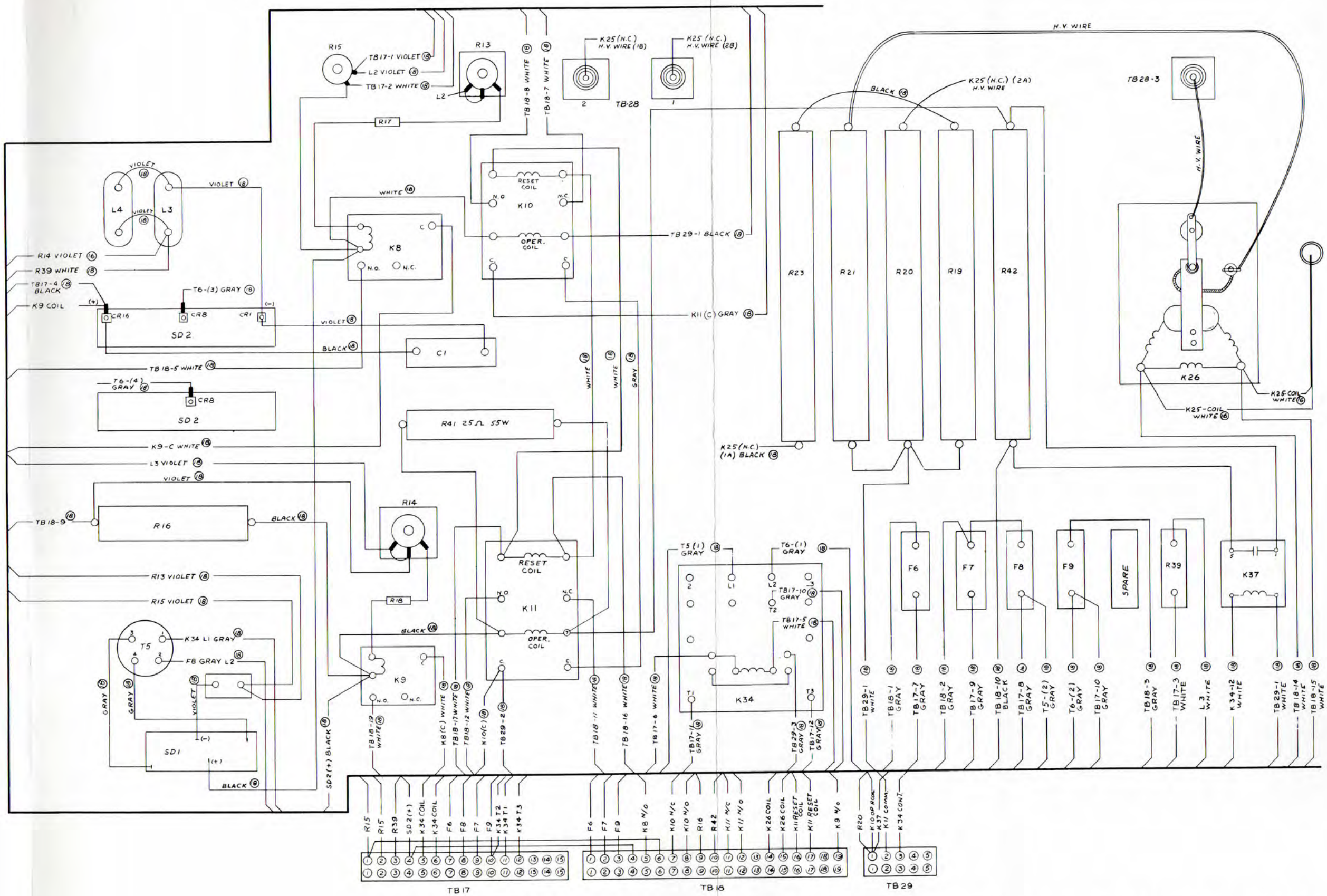

Figure 6-30. Right Cabinet Control Panel, Wiring Diagram

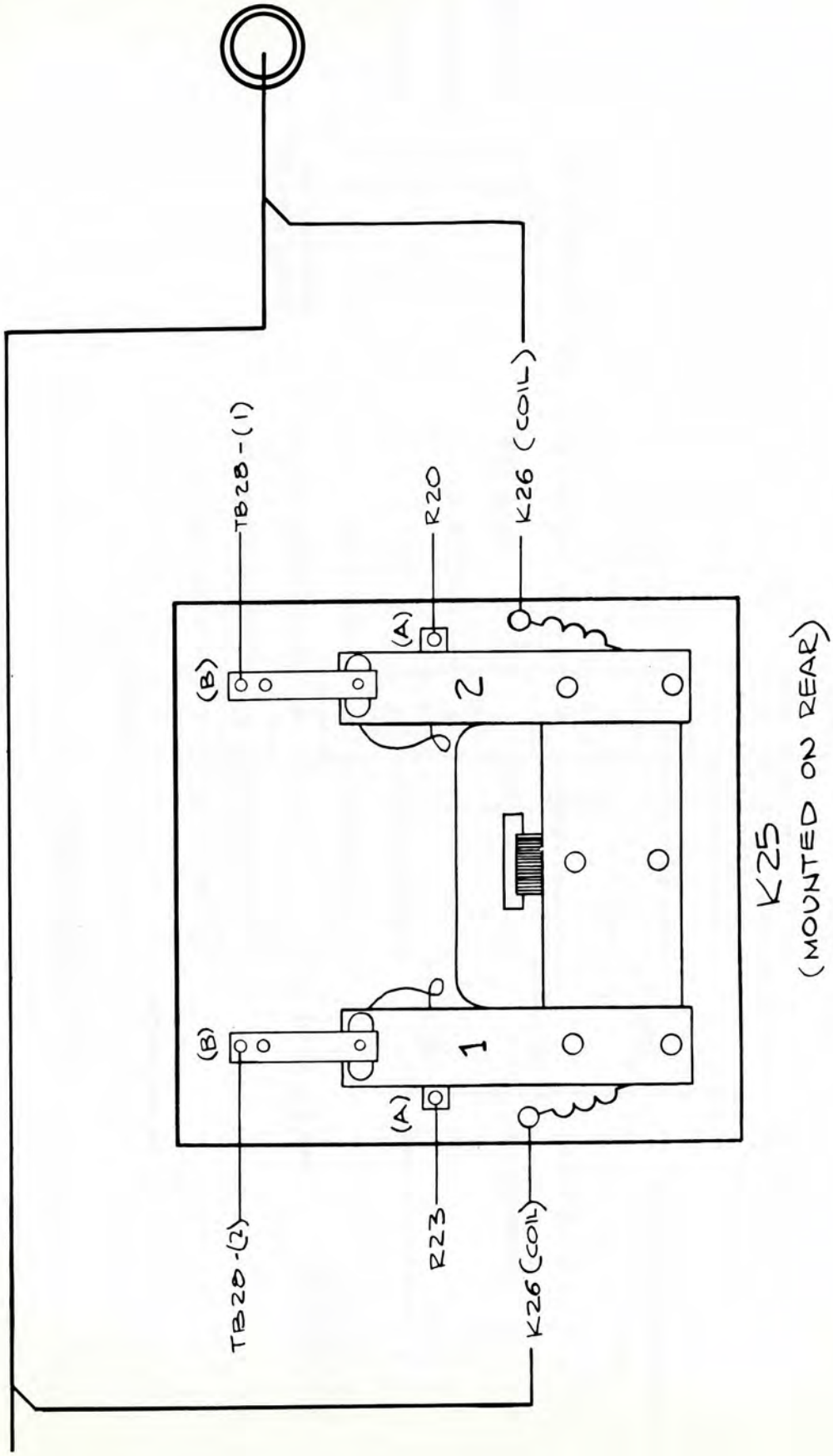

Figure 6-31. Right Cabinet Control Panel, Rear, Wiring Diagram

SECTION 7

PARTS LIST

7-1. INTRODUCTION.

Reference designations have been assigned to identify all maintenance parts of the power supply. These reference designations are used for marking the equipment (adjacent to the parts they identify) and are included on drawings, diagrams, and the parts list. The letters of a reference designation indicate the kind of part (generic group) such as resistor, amplifier, electron tubes, etc. The numbers differentiate between parts of the same generic group and are assigned in consecutive order within a generic group. For complete identification of parts of the power supply, the prefix 1A- must be added to the reference designation shown. For example, the complete designation of resistor R19 is 1AR19.

7-2. MAINTENANCE PARTS LIST.

Table 7-1 lists the maintenance parts for the power supply and is arranged in three columns, showing reference designations, names and descriptions, and functions for the parts listed. When the reference designation of a part is known, this table will furnish ready identification of the part and its function.

7-3. LIST OF MANUFACTURERS.

Table 7-2 lists manufacturers of parts used in the equipment. The first column includes the abbreviations used in table 7-1 to identify manufacturers.

TABLE 7-1. POWER SUPPLY PP-2540/FPN-42, MAINTENANCE PARTS LIST

REF DESIGNATION	DESCRIPTION	FUNCTION
1A	POWER SUPPLY PP-2540/FPN-42: three cabinet sectionalized; control and indicator panel on front of center cabinet section; supplies five separate outputs; 15.5 KV regulated; 7.75 KV regulated; 3.8 KV regulated; -600 Vdc; and -300 Vdc; Richardson-Allen Part No. 75000 (Contract Tcg-41012) Manson Labs Part No. 520 (Contract Tcg 41547) Sperry drwg. 1504598	To supply dc voltages to Loran-C Transmitter AN/FPN-42
B1	FAN, VANE AXIAL: 1 stage 24 in. dia propeller; PMVR supplied w/unit; 1/3 hp elec motor single phase 115 Vac 1750 rpm; Amer Std 4K16; Sperry drwg. 1380808	Cabinet cooler (figure 6-7)
B1A	MOTOR, 115 VAC: 60 cycles; 1725 rpm; 1/3 hp; CCW rotation; G. E. Catalog No. KH43JG269	Replacement for B1
B2	FAN, CENTRIFUGAL: 1 stage CW rotation PMVR supplied w/unit; 1/3 hp single phase 115 Vac 1750 rpm elec motor, Amer Std 4K16; Peerless Model No. 1-1/4; Sperry drwg. 4223-09676	Tube cooler (figure 6-9)
B2A	MOTOR, 115 VAC: 60 cycles; 1725 rpm; 1/3 hp; CCW rotation, G. E. Catalog No. 5KC43JG5E	Replacement for B2
C1	CAPACITOR, FXD, PAPER DIELECTRIC: 0.1 uf 2000 WVDC; MIL Type CP70E1EJ104V; Sperry drwg. 041-21; Richardson-Allen Part No. 75356	Reduce ripple in -600 volt bias supply (figure 6-2)
CB1 (Contract Tcg-41012)	CIRCUIT BREAKER: Manually and/or motor operated; 3 pole, 600 Vac contacts; 350 amp thermal and magnetic trip; operating ambient temp thermal contact 122°F (50°C); includes motor operator rated 208 Vac, 60 cycles; one phase; undervoltage trip coil rated 115 Vac 60 ±5% cycles to trip below 30% with three auxiliary contacts, two N.O., one N.C. ITE Circuit Breaker Co. Type ETM, 350A per Richardson-Allen Part No. 75011; Sperry drwg. 4223-09655	Disconnects input of Z1 (figure 6-7)

TABLE 7-1. POWER SUPPLY PP-2540/FPN-42, MAINTENANCE PARTS LIST (Cont)

REF DESIGNATION	DESCRIPTION	FUNCTION
CB1A	MOTOR ASSEMBLY: 208 Vac, 60 cps, single phase; ITE Part No. ET-9218-AR-208V; Sperry drwg. 4223-09955	Replacement in CB1 Richardson-Allen Power Supply
CB1 (Contract Tcg-41547)	CIRCUIT BREAKER: as shown except G. E. Catalog No. TKM436F000; Manson Labs Part No. 520CB1; Sperry drwg. 4223-09655	
	NOTE: INTERCHANGEABLE WITH I.T.E. CIRCUIT BREAKER BY ADDITION OF MOUNTING PLATE, SPERRY DRWG. 4224-65000 AND SHOCK MOUNTS, SPERRY DRWG. 4224-00016	
	CONSISTING OF BELOW LISTED ITEMS:	
CB1A	MECHANISM, MOTOR OPERATING: G. E. Catalog No. TKMMOM-2, Sperry drwg. 4223-09655-1	Replacement in CB1 Manson Labs Power Supply (Contract Tcg-41547)
CB1B	SWITCH, AUXILIARY: G. E. Catalog No. TKMAS2AB3L, Sperry drwg. 4223-09655-2	Replacement in CB1 Manson Labs Power Supply (Contract Tcg-41547)
CB1C	SWITCH, BELL ALARM: G. E. Catalog No. ABPO-ISO, Sperry drwg. 4223-09655-3	Replacement in CB1 Manson Labs Power Supply (Contract Tcg-41547)
CB1D	RELEASE, UNDERVOLTAGE: G. E. Catalog No. TKMUVIRS, Sperry drwg. 4223-09655-4	Replacement in CB1 Manson Labs Power Supply (Contract Tcg-41547)
CB1E	LUG, TERMINAL: G. E. Catalog No. TC4212, Sperry drwg. 4223-09655-5	Replacement in CB1 Manson Labs Power Supply (Contract Tcg-41547)
DS1	LAMP, INCANDESCENT: 125 V, 6 watts; double contact bayonet base; Dialco Cat. No. 6S6 DC; Sperry drwg. 0177-91	Phase one primary power indicator (figure 3-1)
DS2	Same as DS1	Phase two primary power indicator (figure 3-1)
DS3	Same as DS1	Phase three primary power indicator (figure 3-1)

TABLE 7-1. POWER SUPPLY PP-2540/FPN-42, MAINTENANCE PARTS LIST (Cont)

REF DESIGNATION	DESCRIPTION	FUNCTION
DS4	Same as DS1	Indicator for K28 (figure 3-1)
DS5	Same as DS1	Indicator light for K30 (figure 3-1)
DS6	Same as DS1	Indicator light for K31 (figure 3-1)
DS7	LAMP, INCANDESCENT: 250 V, 10 watts; double contact bayonet base; Type 10/S6/10 DC; Sperry drwg. 4223-09815	Indicator for F1 (figure 3-1)
DS8	Same as DS7	Indicator for F2 (figure 3-1)
DS9	Same as DS7	Indicator for F3 (figure 3-1)
DS10	Same as DS1	Indicator for K33, K1, and K32 (figure 3-1)
DS11	Same as DS7	Indicator for F4 (figure 3-1)
DS12	Same as DS7	Indicator for F5 (figure 3-1)
DS13	Same as DS1	Indicator for K2 (figure 3-1)
DS14	Same as DS1	Indicator for K27 (figure 3-1)
DS15	Same as DS1	Indicator for K34 (figure 3-1)
DS16	Same as DS1	Indicator for K15 (figure 3-1)
DS17	Same as DS1	Indicator for K16 (figure 3-1)
DS18	Same as DS1	Indicator for K17 (figure 3-1)
DS19	Same as DS1	Indicator for K18 (figure 3-1)
DS20	Same as DS1	Indicator for K19 (figure 3-1)
DS21	Same as DS1	Indicator for K20 (figure 3-1)
DS22	Same as DS1	Indicator for K21 (figure 3-1)

TABLE 7-1. POWER SUPPLY PP-2540/FPN-42, MAINTENANCE PARTS LIST (Cont)

REF DESIGNATION	DESCRIPTION	FUNCTION
DS23	Same as DS1	Indicator for minimum plate voltage (figure 3-1)
DS24	Same as DS1	Indicator for maximum plate voltage (figure 3-1)
DS25	Same as DS1	Indicator for K29 (figure 3-1)
DS26	Same as DS7	Indicator for F6 (figure 3-1)
DS27	Same as DS7	Indicator for F7 (figure 3-1)
DS28	Same as DS1	Indicator for K23 (figure 3-1)
DS29	Same as DS1	Indicator for K22 (figure 3-1)
DS30	Same as DS1	Indicator for S12 (figure 3-1)
DS31	Same as DS1	Indicator for K24 (figure 3-1)
DS32	Same as DS7	Indicator for F8 (figure 3-1)
DS33	Same as DS7	Indicator for F9 (figure 3-1)
DS34 through DS47	Same as DS1	Panel edge lights
DS48	HORN, ELECTRICAL: 110 db loudness rating 243 feet; Sperti-Faraday Type 122; Sperry drwg. 1200743	Low voltage alarm (figure 6-6)
F1	FUSE: one time; 70A 250 V; Chase-Shawmut Cat. No. OT70; Sperry drwg. 4223-09667-1	Protective device for Z2 (figure 6-12)
F2	Same as F1	Protective device for Z2 (figure 6-12)
F3	Same as F1	Protective device for Z2 (figure 6-12)
F4	FUSE: one time; 25A 250 V; Chase-Shawmut Cat. No. OT25; Sperry drwg. 4223-09667-2	Protective device for T4 (figure 6-12)
F5	Same as F4	Protective device for T4 (figure 6-12)

TABLE 7-1. POWER SUPPLY PP-2540/FPN-42, MAINTENANCE PARTS LIST (Cont)

REG DESIGNATION	DESCRIPTION	FUNCTION
F6	FUSETRON: 1A 250 V; Bussman No. FRN1; Sperry drwg. 4223-09667-3	Protective device for T7 (figure 6-2)
F7	FUSETRON: 10A 250 V; Bussman No. FRN-10; Sperry drwg. 4223-09613	Protective device for T8 (figure 6-2)
F8	Same as F6	Protective device for T7 (figure 6-2)
F9	Same as F7	Protective device for T8 (figure 6-2)
F10	FUSE: one time 5A 120 V; Chase-Shawmut Cat. No. OT5	Protective device for CB1
K1	RELAY, ARMATURE: DPDT, 115 Vac 60 cycles; Agastat Part No. DE-Y-16N; Sperry drwg. 4223-09637-1	Initial 15-second warm-up (figure 6-12)
K2	RELAY, ARMATURE: DPDT, 115 Vac 60 cycles; Agastat Part No. DE-B-16N AGA drwg. No. SS364; Sperry drwg. 4223-09637-2	Full filament voltage 300-second warm-up (figure 6-12)
K3	RELAY, ARMATURE: DPDT, 115 Vac 60 cycles; Agastat Part No. DE-R-15N AGA drwg. No. SS364; Sperry drwg. 4223-09637-3	90-second 3-strike reset limit (figure 6-1)
K4	RELAY, ARMATURE: 115 Vac 60 cycles; Struthers-Dunn Part No. 99AXB116; Sperry drwg. 4223-09633	3-strike reset (figure 6-1)
K5	RELAY, ARMATURE: DPDT, contact data 6 amp 115 Vac; Struthers-Dunn Part No. 1XB139; Sperry drwg. 4223-09636	Control for circuit breaker CB1 (figure 6-1)
K6	RELAY, ARMATURE: SPDT, contact data 6 amp 115 Vac; Struthers-Dunn Part No. 1XAX149; Sperry drwg. 4223-09635	Re-close CB1 (figure 6-1)
K7	Same as K5	Lower plate volts interlock T1 (figure 6-1)
K8	RELAY, ARMATURE: SPDT, contact data 115 Vac 2 amp; Struthers-Dunn Part No. 112XAX220; Sperry drwg. 4223-09647	-300 volt bias undervoltage interlock (figure 6-2)
K9	Same as K8	-600 volt bias undervoltage interlock (figure 6-2)
K10	RELAY, ARMATURE: DPST N.O. 6 amp 115 Vac; Struthers-Dunn Part No. 55AXA103; Sperry drwg. 4223-09630-3	-300 volt bias overload (figure 6-2)

TABLE 7-1. POWER SUPPLY PP-2540/FPN-42, MAINTENANCE PARTS LIST (Cont)

REF DESIGNATION	DESCRIPTION	FUNCTION
K10A	COIL, RELAY: 200 ma; Sperry drwg. 4223-09630-30	
K11	RELAY, ARMATURE: DPST 6 amp 115 Vac; Struthers-Dunn Part No. 55AXA103; Sperry drwg. 4223-09630-4	-600 volt bias overload (figure 6-2)
K11A	COIL: 750 ma; for Relay K11; Sperry drwg. 4223-09630-40	
K12	RELAY, ARMATURE: DPST 6 amp 115 Vac; Struthers-Dunn Part No. 55AXA103; Sperry drwg. 4223-09630-1	15.5 KV overload (figure 6-1)
K12A	COIL: 5.5 amp; for Relay K12; Sperry drwg. 4223-09630-10	
K13	RELAY, ARMATURE: DPST 6 amp 115 Vac; Struthers-Dunn Part No. 55AXA103; Sperry drwg. 4223-09630-2	7.75 KV overload (figure 6-1)
K13A	COIL: 250 ma; for Relay K13; Sperry drwg. 4223-09630-20	
K14	Same as K13	3.8 KV overload (figure 6-1)
K14A	Same as K13A	
K15	RELAY, ARMATURE: SPDT 6 amp 115 Vac; Struthers-Dunn Part No. 51AXA174; Sperry drwg. 4223-09634	CB1 circuit breaker trip indicator (figure 6-1)
K16	Same as K15	-600 volt bias overload indicator (figure 6-1)
K17	Same as K15	-300 volt bias overload indicator (figure 6-1)
K18	Same as K15	3.8 KV overload indicator (figure 6-1)
K19	Same as K15	7.75 KV overload indicator (figure 6-1)
K20	Same as K15	15.5 KV overload indicator (figure 6-1)
K21	Same as K6	Power supply door interlock (figure 6-1)
K22	Same as K6	Coupling and load door interlock (figure 6-1)

TABLE 7-1. POWER SUPPLY PP-2540/FPN-42, MAINTENANCE PARTS LIST (Cont)

REF DESIGNATION	DESCRIPTION	FUNCTION
K23	Same as K6	P.A. door interlock (figure 6-1)
K24	Same as K5	Low voltage alarm (figure 6-1)
K25	RELAY, ARMATURE: DPST 17 KV insulation, 10 amp peak; Struthers-Dunn Part No. 90BXX113; Sperry drwg. 4223-09632	3.8 KV and 7.75 KV high voltage grounding (figure 6-14)
K26	RELAY, ARMATURE: SPST 17 KV insulation, 10 amp peak; Struthers-Dunn Part No. 90XXA110; Sperry drwg. 4223-09631	15.5 KV high voltage grounding (figure 6-2)
K27	STARTER, MOTOR: remote control overload protection Type A-B Bulletin 709 size 5; Allen-Bradley Part No. 709FOD; Sperry drwg. 4223-09650	Starter for T1 (figure 6-14)
K27A	COIL: tropicalized; 115 Vac; for Relay K27; Sperry drwg. 4223-09650-10	
K27B	CONTACT, MOVABLE: for Relay K27; Sperry drwg. 4223-09650-12	
K27C	CONTACT, STATIONARY: for Relay K27; Sperry drwg. 4223-09650-11	
K27D	HEATER, ELEMENT: 247 amp; Allen-Bradley Type N60; Sperry drwg. 4223-09650-13, 2 per relay	
K28	STARTER, MOTOR: remote control overload protection Type A-B Bulletin 709 size 0; Allen-Bradley Part No. 709AOD; Sperry drwg. 4223-09651-5	Starter for P.A. tube blower (figure 6-1)
K28A	COIL: tropicalized; 115 Vac; Allen-Bradley Type No. 0A01B; Sperry drwg. 4223-09651-3	Replacement coil for K21
K28B	CONTACT, MOVABLE: Allen-Bradley Type No. X33553; Sperry drwg. 4223-09651-6	
K28C	HEATER, ELEMENT: 8.35 amp, Allen-Bradley Type N29; Sperry drwg. 4223-09651-7, 2 per relay	
K28D	CONTACT, STATIONARY: long; Allen-Bradley Type X35162; Sperry drwg. 4223-09651-5	

TABLE 7-1. POWER SUPPLY PP-2540/FPN-42, MAINTENANCE PARTS LIST (Cont)

REF DESIGNATION	DESCRIPTION	FUNCTION
K28E	CONTACT, STATIONARY: short; Allen-Bradley Type X33977; Sperry drwg. 4223-09651-4	
K29	Same as K28	Starter for P.A. cabinet blower (figure 6-1)
K29A	Same as K28A	
K29B	Same as K28B	
K29C	HEATER, ELEMENT: 1.11 amp, Allen-Bradley Type N8; Sperry drwg. 4223-09651-8, 2 per relay	
K29D	Same as K28D	
K29E	Same as K28E	
K30	Same as K28	Starter for power supply cabinet blower B1 (figure 6-1)
K30A	Same as K28A	
K30B	Same as K28B	
K30C (1) (Contract Tcg-41547)	HEATER, ELEMENT: 5.22 amp, Allen-Bradley Type N24; Sperry drwg. 4223-09651-9, 2 per relay; for Serial Nos. 1-16, Contract Tcg-41012	
K30C (2) (Contract Tcg-41547)	HEATER, ELEMENT: 8.35 amp, Allen-Bradley Type N29; Sperry drwg. 4223-09651-7 for Serial Nos. 17-26, Contract Tcg-41547	
K31	Same as K28	Starter for power supply tube blower B2 (figure 6-1)
K31A	Same as K28A	
K31B	Same as K28B	
K31C (1)	Same as K30C (1)	
K31C (2)	Same as K30C (2)	
K31D	Same as K28D	
K31E	Same as K28E	
K32	STARTER, MOTOR: remote control overload protection type; Allen-Bradley Part No. 709COD; Sperry drwg. 4223-09649	Half-voltage starter for T2 and T3 (figure 6-12)

TABLE 7-1. POWER SUPPLY PP-2540/FPN-42, MAINTENANCE PARTS LIST (Cont)

REF DESIGNATION	DESCRIPTION	FUNCTION
K32A	COIL: tropicalized; 115 Vac; for Relay K32; Allen-Bradley Type 2A01B; Sperry drwg. 4223-09649-10	
K32B	CONTACT, MOVABLE: for Relay K32; Allen-Bradley Type X36670; Sperry drwg. 4223-09649-12, 3 per relay	
K32C	CONTACT, STATIONARY: for Relay K32; Allen-Bradley Type X36702; Sperry drwg. 4223-09649-12, 6 per relay	
K32D	HEATER, ELEMENT: 26.6 amp, Allen-Bradley Type N40; Sperry drwg. 4223-09649-13, 2 per relay	
K33	STARTER, MOTOR: remote control overload protection type; A-B Bulletin 709; Allen-Bradley Part No. 709DOD; Sperry drwg. 4223-09652	Full voltage starter for T2 and T3 (figure ure 6-12)
K33A	COIL: tropicalized; 115 Vac; for Relay K33; Allen-Bradley Part No. 3A01B; Sperry drwg. 4223-09652-10	
K33B	CONTACT, MOVABLE: for Relay K33, Allen-Bradley Type X36671; Sperry drwg. 4223-09652-12, 3 per relay	
K33C	CONTACT, STATIONARY: for Relay K33; Allen-Bradley Type X36703; Sperry drwg. 4223-09652-11, 6 per relay	
K33D	HEATER, ELEMENT: 60 amp, Allen-Bradley Type N48; Sperry drwg. 4223-09652	
K34	Same as K28	
K34A	Same as K28A	
K34B	Same as K28B	
K34C (1) (Contract Tcg-41012)	HEATER, ELEMENT: 3.18 amp, Allen-Bradley Type N19; Sperry drwg. 4223-09651-2, 2 per relay, for Serial Nos. 1-16, Contract Tcg-41012	
K34C (2) (Contract Tcg-41547)	HEATER, ELEMENT: 4.29 amp, Allen-Bradley Type N22; Sperry drwg. 4223-09651-10, 2 per relay, for Serial Nos. 17-26, Contract Tcg-41547)	
K34D	Same as K28D	
K34E	Same as K28E	

TABLE 7-1. POWER SUPPLY PP-2540/FPN-42, MAINTENANCE PARTS LIST (Cont)

REF DESIGNATION	DESCRIPTION	FUNCTION
K35	RELAY, FLASHER: 115 Vac; to flash 6 watt lamp load 40 flashes per minute; Reynolds Part No. M4174; Sperry drwg. 4223-09654	Flasher for DS31 (figure 6-1)
K37	Same as K1	Surge suppressor for overload relay K11 (figure 6-2)
L1	REACTOR: inductance 10 henries; 300 ma dc current rating; 100 ohms dc resistance; 180 cps ripple frequency; Electronic Transformer Co. Part No. 152604; Transformers, Inc. Part No. FQJ-2; Sperry drwg. 4223-09668	3.8 KV filter choke (figure 6-9)
L2	REACTOR: inductance 10 henries; 300 ma dc current rating; 95 ohms dc resistance, JB case; MIL-T-27; Ferranti Part No. FC12; Sperry drwg. 4223-09639	-300 volt bias filter choke (figure 6-2)
L3	REACTOR: inductance 1.75 henries; 1 amp dc current rating; 12.5 ohms dc resistance; MIL Type TF4RX04MB; Freed Part No. MGC31; Sperry drwg. 1383174	-600 volt bias filter choke (filter 6-2)
L4	Same as L3	-600 volt bias filter choke (figure 6-2)
M1 through M12	AMMETER: dc type; 0-5 amp range linear; MIL-M-6/9 Type No. MR35W005DCAA; Sperry drwg. 4223-09640	Measures plate current of V1 through V12 (figure 3-1)
M13	VOLTMETER: dc type; linear range 0-500 volts; MIL-M-6/8 Type No. MR35W500DCVV; Sperry drwg. 0265-16	Measures voltage output of T5 (figure 3-1)
M14	VOLTMETER: dc type; 0-1 KV dc range; MIL-M-6/8 Type No. MR35W020DCKV; Sperry drwg. 4223-09641-2	Measures voltage output of T6 (figure 3-1)
M15	VOLTMETER: dc type; 0-20 KV dc range; MIL-M-6/8 Type No. MR35W020DCKV; Sperry drwg. 4223-09641-3	Measures 15.5 KV plate voltage (figure 3-1)
M16	VOLTMETER: dc type; 0-10 KV dc range; MIL-M-6/8 Type No. MR35W010DCKV; Sperry drwg. 4223-09641-4	Measures 7.75 KV driver plate voltage (figure 3-1)

TABLE 7-1. POWER SUPPLY PP-2540/FPN-42, MAINTENANCE PARTS LIST (Cont)

REF DESIGNATION	DESCRIPTION	FUNCTION
M17	VOLTMETER: dc type; 0-5 KV dc range; MIL-M-6/8 Type No. MR35W005DCKV; Sperry drwg. 4223-09641-5	Measures 3.8 KV driver plate voltage (figure 3-1)
M18	VOLTMETER: ac type; 0-300 volts range; MIL-M-6/10 Type No. MR35W300ACVV; Sperry drwg. 0269-15	Measures unregulated and regulated primary voltages (figure 3-1)
M19	METER; ELAPSED TIME: 115 Vac; indicating 1/10 hours to total of 9999.9 hours; Cramer Cat. No. 632; JBT Inst. No. 31-EX; Sperry drwg. 4223-09638	Totalizes elapsed operating time
O1	FILTER, air conditioning, anodized aluminum media material, 24 in. X 24 in. X 1 in. thick, Air-Maze Type R-82-A; Sperry drwg. 0677-027	
R1, R2, R3	(NOT USED)	
R4	RESISTOR, FXD, WW: 8 ohms ±5% non-inductive winding 203 watts 350°C; max cont operating temp 25°C ambient temp; MIL-R-26B Type No. RW10V8R0; Sperry drwg. 4223-09657	Half-filament voltage bleeder (figure 6-12)
R5	Same as R4	Same as R4 (figure 6-12)
R6	Same as R4	Same as R4 (figure 6-12)
R7	Same as R4	Same as R4 (figure 6-12)
R8	Same as R4	Same as R4 (figure 6-12)
R9	Same as R4	Same as R4 (figure 6-12)
R10	Same as R4	Same as R4 (figure 6-12)
R11	Same as R4	Same as R4 (figure 6-12)
R12	Same as R4	Same as R4 (figure 6-12)

TABLE 7-1. POWER SUPPLY PP-2540/FPN-42, MAINTENANCE PARTS LIST (Cont)

REF DESIGNATION	DESCRIPTION	FUNCTION
R13	RESISTOR, VARIABLE: comp 1 section; 500 K ohms ±10% 2 watts; std A taper; single shaft; metal slotted 0.063 in. lg by 0.047 in. W, 5/8 in. lg on shaft, 1/4 in. dia of shaft equip w/shaft-locking device; MIL-R-94B Type No. RV4NAVSD504A; Sperry drwg. 625713-053	-300 volt bias under-voltage adjustment (figure 6-2)
R14	RESISTOR, VARIABLE: comp 1 section; 1 megohm ±10% 2 watts; std A taper; single metal shaft slotted 0.063 in. lg by 0.047 in. W, 5/8 in. lg on shaft, 1/4 in. dia of shaft equip w/shaft-locking device; MIL-R-94B Type No. RV4NAVSD105A; Sperry drwg. 625713-055	-600 volt bias under-voltage adjustment (figure 6-2)
R15	RESISTOR, FXD, WW: 18 K ohms ±5% winding 30 watts 275°C max cont operating temp 25°C ambient temp; MIL-R-26B Type No. RW34F183; Sperry drwg. 4223-09661	-300 volt bleeder (figure 6-2)
R16	RESISTOR, FXD, WW: 80 K ohms ±5% ferrule type, 86 watts to MIL-R-26B; Type RW12F803; Sperry drwg. 4223-09660	-600 volt bleeder (figure 6-2)
R17	RESISTOR, FXD, COMP: 200 K ohms 2 watts to MIL-R-11; MIL Type RC42GF204J; Sperry drwg. 813190-104	Dropping resistor for K8 (figure 6-2)
R18	RESISTOR, FXD, COMP: 400 K ohms 2 watts to MIL-R-11; MIL Type RC42GF404J; Sperry drwg. 813190-111	Dropping resistor for K9 (figure 6-2)
R19	RESISTOR, FXD, WW: 2000 ohms ±5% non-inductive winding 140 watts 275°C max cont operating temp 25°C ambient temp; MIL-R-26B Type No. RW10F202; Sperry drwg. 4223-09559	Current limiter for contact of K25 (figure 6-2)
R20	RESISTOR, FXD, WW: 1000 ohms ±5% non-inductive winding 140 watts 275°C max cont operating temp 25°C ambient temp; MIL-R-26B Type No. RW10F102; Sperry drwg. 4223-09658	Current limiter for contact of K25 (figure 6-2)
R21	Same as R19	Current limiter for contact of K26 (figure 6-2)

TABLE 7-1. POWER SUPPLY PP-2540/FPN-42, MAINTENANCE PARTS LIST (Cont)

REF DESIGNATION	DESCRIPTION	FUNCTION
R22	RESISTOR, VARIABLE, WW: 2500 ohms ±5%, 25 watts, MIL-R-22A Type RP101RD252KK; Sperry drwg. 4223-09656	Low line voltage adjustment (figure 6-1)
R23	Same as R19	Current limiter for contact of K25 (figure 6-2)
R24 (Contract Tcg-41012)	METER SHUNT: 50 MV; 5 amp dc; Beede Part No. 27070; Sperry drwg. 4223-09653-1	Shunt for M1
R24 (Contract Tcg-41547)	METER SHUNT: 50 MV; 5 amp dc; A and M Instruments Part No. S0050; Sperry drwg. 4223-09653-2	Shunt for M1
R25	Same as R24	Shunt for M2
R26	Same as R24	Shunt for M3
R27	Same as R24	Shunt for M4
R28	Same as R24	Shunt for M5
R29	Same as R24	Shunt for M6
R30	Same as R24	Shunt for M7
R31	Same as R24	Shunt for M8
R32	Same as R24	Shunt for M9
R33	Same as R24	Shunt for M10
R34	Same as R24	Shunt for M11
R35	Same as R24	Shunt for M12
R36	RESISTOR, FXD, WW: non-inductive winding 20 megohms ±0.5% 20 watts 95°C max cont operating temp 25°C ambient temp; JAN-R-29 Type MFF-2061; Sperry drwg. 4223-09782	Multiplier for M15 (figure 6-9)
R37	RESISTOR, FXD, WW: non-inductive winding 10 megohms ±0.5% 20 watts 95°C max cont operating temp 25°C ambient temp; JAN-R-29 Type MFD-1061; Sperry drwg. 4223-09783	Multiplier for M16 (figure 6-9)
R38	RESISTOR, FXD, WW: non-inductive winding 5 megohms ±0.5% 5 watts 95°C max cont operating temp 25°C ambient temp; JAN-R-29 Type MFA-505; Sperry drwg. 4223-09784	Multiplier for M17 (figure 6-9)

TABLE 7-1. POWER SUPPLY PP-2540/FPN-42, MAINTENANCE PARTS LIST (Cont)

REF DESIGNATION	DESCRIPTION	FUNCTION
R39	RESISTOR, FXD, WW: non-inductive winding 1 megohm ±0.5% 1 watt 95°C max cont operating temp 25°C ambient temp; JAN-R-29 Type MFB-105; Sperry drwg. 4223-09785	Multiplier for M14 (figure 6-2)
R40	RESISTOR, VARIABLE, WW: 150 ohms; 50 watts; MIL-R-22 Type RP151SA151KK; Sperry drwg. 4223-09786	Automatic high voltage adjust (figure 3-1)
R41	RESISTOR, FXD, WW: 25 ohms; 5% 55 watts; MIL-R-26C Type RW35V250; Sperry drwg. 0739-49	-600 V Overload Relay (K11) shunt (figure 6-2)
R42	RESISTOR, FXD, WW: non-inductive; 100 ohms, 140 watts; MIL-R-26 Type RW11F101; Sperry drwg. 1380789-9	
S1	SWITCH, ROTARY: 2-pole, 6-pos. on two decks; JBT Part No. MAS-14B-2; Sperry drwg. 4223-09669	Primary voltage phase selector (figure 3-1)
S2	SWITCH, TOGGLE: SPST; 10 amp, .250 Vac or 20 amp, 125 Vac, JAN-S-23 Type ST52N; Sperry drwg. 0232-1	Bias voltage switch (figure 3-1)
S3	Same as S2	Plate voltage switch (figure 3-1)
S4	Same as S2	Filament voltage switch (figure 3-1)
S5	SWITCH, AIR FLOW, INTERLOCK: SPST; H. G. Dietz Part No. 113MF-E; Sperry drwg. 1380722-1	Interlock for B1 (figure 6-7)
S6	Same as S5	Interlock for B2 (figure 6-11)
S7	SWITCH, PUSHBUTTON: SPST; N. C.; G. E. Part No. CR2940-UK202C; Sperry drwg. 1200411	EMERGENCY STOP (figure 3-1)
S8	SWITCH, PUSHBUTTON: SPST; N. O.; G. E. Part No. CR2940-UA202B; Sperry drwg. 1200410	Turn-on switch (figure 3-1)
S9	Same as S8	3-strike relay reset (figure 3-1)
S10	Same as S8	Overload reset (figure 3-1)
S11	Same as S8	Low line alarm reset (figure 3-1)

TABLE 7-1. POWER SUPPLY PP-2540/FPN-42, MAINTENANCE PARTS LIST (Cont)

REF DESIGNATION	DESCRIPTION	FUNCTION
S12	SWITCH, TOGGLE: DPDT; Contact data 20 amp at 125 Vdc, JAN-S-23 Type ST52N; Sperry drwg. 0233-4	Disable DS48 (figure 3-1)
S13	SWITCH, SENSITIVE: MS16106-1; Sperry drwg. 849511	Door interlock
S13A	Same as S13	Door interlock
S14	SWITCH, SENSITIVE: SPST; N. O.; Micro Switch Part No. BZ-2RQ1; Sperry drwg. 4223-09812	Door interlock (figure 6-2)
S15	Same as S13	Door interlock
S16	Same as S12	Manual-automatic selector for Z1 (figure 3-1)
S17	SWITCH, TOGGLE: 3PDT; MIL-S-6745; Cutler-Hammer Part No. 8744K9; Sperry drwg. 4223-09671	Selects Z1 or Z2 for M18 (figure 3-1)
S18	Same as S13	Door interlock (figure 6-12)
S19	Same as S13	Door interlock
S20	Same as S13	Door interlock
S21	Same as S13	Door interlock (figure 6-2)
S21A	Same as S13	Door interlock
S22	Same as S13	Door interlock
S23	Same as S8	Raise output of Z1 (figure 3-1)
S24	Same as S8	Lower output of Z1 (figure 3-1)
SD1	SILICON DIODE ASSEMBLY: consists of 8 diodes assembled on plate with 4-2-1 connection. Each diode shunted by a resistor; Sperry drwg. 4223-09646	-300 bias rectifier (figure 6-2)
SD1A	SILICON DIODE: Westinghouse No. 3022, JETEC No. 1N1443; Sperry drwg. 4223-09646-1	
SD1B	RESISTOR, FXD, COMP: 330 K ohms; 2 watts; MIL-R-11C Type RC42GF334J; Sperry drwg. 813190-109	

TABLE 7-1. POWER SUPPLY PP-2540/FPN-42, MAINTENANCE PARTS LIST (Cont)

REF DESIGNATION	DESCRIPTION	FUNCTION
SD2	SILICON DIODE ASSEMBLY: consists of 32 diodes on terminal boards, 4-8-1 connection; 1000 PIV each diode; Sperry drwg. 4223-09680	-600 bias rectifier (figure 6-2)
SD2A	SILICON DIODE: for silicon diode assembly SD2, JETEC No. 1N1126; Sperry drwg. 4223-09680-1	
T1 (Contract Tcg-41012)	TRANSFORMER, POWER, PHASE CONVERSION: 3 phase to 6 phase conversion using isolated delta- and wye-connected secondaries; 293-volt line-to-line input; 6650 volt output from delta, 6650 volt output from wye; 110 K VA output power rating; 60 cycles; 33 in. lg; 33-1/4 in. high; 11-1/2 in. wide; Richardson-Allen Part No. 75001; Sperry drwg. 4223-95888	Plate transformer for V1 through V12 (figure 6-14)
T1 (Contract Tcg-41547)	TRANSFORMER, POWER, PHASE CONVERSION: 3 phase to 6 phase conversion using isolated delta- and wye-connected secondaries; 293-volt line-to-line input; 6650 volt output from delta, 6650 volt output from wye; 110 K VA output power rating; 60 cycles; 33 in. lg; 33-1/4 in. high; 11-1/2 in. wide; Magnatran Corp. Part No. 1725-01 and drwg. A91-1725-01; Manson Labs Part No. D-520-4; Sperry drwg. 4223-95888	Plate transformer for V1 through V12 (figure 6-14)
T2 (Contract Tcg-41012)	TRANSFORMER, POWER, STEP-DOWN: primary 208 volts, 3 phase, 60 cycle, wye connectors, 3300 VA 6 secondaries, each centertapped 7.5 volts (3.75 volts each side) 15 in. lg; 11 in. high; 11 in. wide; Richardson-Allen Part No. 75002; Sperry drwg. 4223-09644	Filament transformer for V1 through V6 (figure 6-9)
T2 (Contract Tcg-41547)	TRANSFORMER, POWER, STEP-DOWN: primary 208 volts, 3 phase, 60 cycle, wye connectors, 3300 VA 6 secondaries, each centertapped 7.5 volts (3.75 volts each side); 15 in. lg; 11 in. high; 11 in. wide; Light Electric Co. Type 8840; Manson Labs Part No. 520-2; Sperry drwg. 4223-09644	Filament transformer for V1 through V6 (figure 6-9)

TABLE 7-1. POWER SUPPLY PP-2540/FPN-42, MAINTENANCE PARTS LIST (Cont)

REF DESIGNATION	DESCRIPTION	FUNCTION
T3	Same as T2	Filament transformer for V7 through V12 (figure 6-9)
T4	TRANSFORMER, POWER, STEP-DOWN: single phase, double wound, 60 cps, 208 volts primary; single phase, double wound, 60 cps, 115 volts secondary; 9-1/4 in. lg; 10 in. high; 7-1/4 in. wide; MIL-T-27A Type TF2SX04ZZ; Sperry drwg. 4223-09645	Energizes control circuits (figure 6-9)
T5	TRANSFORMER, POWER, STEP-UP: single phase, double wound, 60 cps, 208 volts primary; single phase, double wound, 60 cps, 465 volts secondary; 4-1/4 in. lg; 5-1/2 in. high; 3-1/2 in. wide; Electronic Transformer Part No. 1421401; Transformers, Inc. Part No. DHJ-2; Sperry drwg. 4223-09643	Power transformer for -300 volt bias (figure 6-2)
T6	TRANSFORMER, POWER, STEP-UP: single phase, double wound, 50-60 cps, 208 volts primary; single phase, double wound, 50-60 cps, 1150 volts 1.8 amp, and 815 volts 2 amp secondary; 8-11/32 in. lg; 8-3/8 in. high; 9-15/32 in. wide; MIL Type TF4RX02YY; Sperry Gyroscope Co. M & T No. SBJ12404; Manson Labs Part No. T-3066; Sperry drwg. 4223-09677	-600 volt bias power transformer (figure 6-14)
T7	TRANSFORMER, VARIABLE, POWER: single phase, 60 cps, 208 volts primary; 0 to 208 volts, 300 VA output; 3-1/2 in. lg; 3-1/8 in. high; 3-1/8 in. wide; Standard Elec. Prod. Co. Part No. 100BU-2; Sperry drwg. 4223-09648-1	Varies input voltage of T5 (figure 6-22)
T8	TRANSFORMER, VARIABLE, POWER: single phase, 60 cps, 208 volts primary; 0-208 volts, 3.1 KVA output; Superior Elec. Co. Part No. Q-117UM-2; Sperry drwg. 1383172	Varies input voltage of T6 (figure 6-22)
T9	TRANSFORMER, VARIABLE, POWER: single phase, 60 cps, 115 volts primary; 0 to 115 volts, 360 VA output; 3-1/2 in. lg; 4 in. high; 4 in. wide; Standard Elec. Prod. Co. Part No. 300BU; Sperry drwg. 4223-09648-2	Varies brightness of panel edge lighting (figure 6-22)

TABLE 7-1. POWER SUPPLY PP-2540/FPN-42, MAINTENANCE PARTS LIST (Cont)

REF DESIGNATION	DESCRIPTION	FUNCTION
TB1	BOARD, TERMINAL: 16 terminal block, Cinch-Jones Cat. No. 16-142; Sperry drwg. 618263-16	Interconnection
TB2	BOARD, TERMINAL: 7 terminal block, Cinch-Jones Cat. No. 7-142; Sperry drwg. 618263-7	
TB3	BOARD, TERMINAL: consists of 3 insulators, Birnbach Cat. No. 4176; Sperry drwg. 4224-00020	
TB4 (A)	BOARD, TERMINAL: 4 terminal block, Cinch-Jones Cat. No. 4-151; Sperry drwg. 718308-4	
TB4 (B)	BOARD, TERMINAL: 14 terminal block, Cinch-Jones Cat. No. 14-142; Sperry drwg. 618263-14	
TB5	BOARD, TERMINAL: 16 terminal block, Cinch-Jones Cat. No. 16-140; Sperry drwg. 741929-16	
TB6	BOARD, TERMINAL: 6 terminal block, Cinch-Jones Cat. No. 6-151; Sperry drwg. 718308-6	
TB7	Same as TB4 (A)	
TB8	BOARD, TERMINAL: 15 terminal block, Cinch-Jones Cat. No. 15-140; Sperry drwg. 741929-15	
TB9	Same as TB8	
TB10	Same as TB8	
TB11	BOARD, TERMINAL: 10 terminal block, Cinch-Jones Cat. No. 10-142; Sperry drwg. 618263-10	
TB12	BOARD, TERMINAL: 13 terminal block, Cinch-Jones Cat. No. 13-140; Sperry drwg. 741929-13	
TB13	BOARD, TERMINAL: 12 terminal block, Cinch-Jones Cat. No. 12-140; Sperry drwg. 741929-12	
TB14	Same as TB13	
TB15	BOARD, TERMINAL: 7 terminal block, Cinch-Jones Cat. No. 7-151	
TB16	Same as TB11	

TABLE 7-1. POWER SUPPLY PP-2540/FPN-42, MAINTENANCE PARTS LIST (Cont)

REF DESIGNATION	DESCRIPTION	FUNCTION
TB17	Same as TB8	
TB18	BOARD, TERMINAL: 19 terminal block, Cinch-Jones Cat. No. 19-140; Sperry drwg. 741929-19	
TB21	Same as TB3	
TB22 through TB27	Same as TB8	
TB28	Same as TB3	
TB29	BOARD, TERMINAL: 5 terminal block, Cinch-Jones Cat. No. 5-142; Sperry drwg. 618263-5	
TB30	Same as TB3	
TB31	Same as TB1	
TB33	Same as TB16	
TB34	Same as TB8	
TB35	Same as TB4 (A)	
TB36	Same as TB15	
V1	ELECTRON TUBE: high vacuum rectifier; 3 amp average plate current; PIV 25,000 volts; filament 7.5 volts 51 amp; Eimac Type 2X3000F; Sperry drwg. 4223-09628	High voltage rectifier (figure 6-9)
V2	Same as V1	High voltage rectifier (figure 6-9)
V3	Same as V1	High voltage rectifier (figure 6-9)
V4	Same as V1	High voltage rectifier (figure 6-9)
V5	Same as V1	High voltage rectifier (figure 6-9)
V6	Same as V1	High voltage rectifier (figure 6-9)
V7	Same as V1	High voltage rectifier (figure 6-9)
V8	Same as V1	High voltage rectifier (figure 6-9)
V9	Same as V1	High voltage rectifier (figure 6-9)
V10	Same as V1	High voltage rectifier (figure 6-9)

TABLE 7-1. POWER SUPPLY PP-2540/FPN-42, MAINTENANCE PARTS LIST (Cont)

REF DESIGNATION	DESCRIPTION	FUNCTION
V11	Same as V1	High voltage rectifier (figure 6-9)
V12	Same as V1	High voltage rectifier (figure 6-9)
XDS1	LIGHT, INDICATOR: sup w/clear green faceted glass lens 1-3/16 in. dia thd holder; Dialco Cat. No. 513202-432; Sperry drwg. 1200409-2	Phase one primary power indicator (figure 3-1)
XDS2	Same as XDS1	Phase two primary power indicator (figure 3-1)
XDS3	Same as XDS1	Phase three primary power indicator (figure 3-1)
XDS4	LIGHT, INDICATOR: sup w/clear amber faceted glass lens 1-3/16 in. dia thd holder; Dialco Cat. No. 513202-433; Sperry drwg. 1200409-3	Indicator for K28 (figure 3-1)
XDS5	Same as XDS4	Indicator light for K30 (figure 3-1)
XDS6	Same as XDS4	Indicator light for K31 (figure 3-1)
XDS7	Same as XDS4	Indicator for F1 (figure 3-1)
XDS8	Same as XDS4	Indicator for F2 (figure 3-1)
XDS9	Same as XDS4	Indicator for F3 (figure 3-1)
XDS10	Same as XDS4	Indicator for K33, K1, and K32 (figure 3-1)
XDS11	Same as XDS4	Indicator for F4 (figure 3-1)
XDS12	Same as XDS4	Indicator for F5 (figure 3-1)
XDS13	Same as XDS4	Indicator for K2 (figure 3-1)
XDS14	LIGHT, INDICATOR: sup w/clear red faceted glass lens 1-3/16 in. dia thd holder; Dialco Cat. No. 513202-431; Sperry drwg. 1200409-1	Indicator for K27 (figure 3-1)
XDS15	Same as XDS4	Indicator for K34 (figure 3-1)

TABLE 7-1. POWER SUPPLY PP-2540/FPN-42, MAINTENANCE PARTS LIST (Cont)

REF DESIGNATION	DESCRIPTION	FUNCTION
XDS16	Same as XDS4	Indicator for K15 (figure 3-1)
XDS17	Same as XDS4	Indicator for K16 (figure 3-1)
XDS18	Same as XDS4	Indicator for K17 (figure 3-1)
XDS19	Same as XDS4	Indicator for K18 (figure 3-1)
XDS20	Same as XDS4	Indicator for K19 (figure 3-1)
XDS21	Same as XDS4	Indicator for K20 (figure 3-1)
XDS22	Same as XDS4	Indicator for K21 (figure 3-1)
XDS23	LIGHT, INDICATOR: sup w/clear white faceted glass lens 1-3/16 in. dia thd holder; Dialco Cat. No. 513202-435; Sperry drwg. 1200409-5	Indicator for minimum plate voltage (figure 3-1)
XDS24	Same as XDS14	Indicator for maximum plate voltage (figure 3-1)
XDS25	Same as XDS4	Indicator for K29 (figure 3-1)
XDS26	Same as XDS4	Indicator for F6 (figure 3-1)
XDS27	Same as XDS4	Indicator for F7 (figure 3-1)
XDS28	Same as XDS4	Indicator for K23 (figure 3-1)
XDS29	Same as XDS4	Indicator for K22 (figure 3-1)
XDS30	Same as XDS11	Indicator for S12 (figure 3-1)
XDS31	Same as XDS4	Indicator for K24 (figure 3-1)
XDS32	Same as XDS4	Indicator for F8 (figure 3-1)
XDS33	Same as XDS4	Indicator for F9 (figure 3-1)

TABLE 7-1. POWER SUPPLY PP-2540/FPN-42, MAINTENANCE PARTS LIST (Cont)

REF DESIGNATION	DESCRIPTION	FUNCTION
XDS34 through XDS47	LIGHT, INDICATOR: screw cap, clear, faceted lens, screw type term. for S6 lamp w/double contact bayonet base mtg 1 in. clearance hole; Dialco Cat. No. 513202-437; Sperry drwg. 1200409-7	Panel edge lights
XV1 through XV10	SUPPORT; ELECTRON TUBE: hat shaped; aluminum; lower rim 6-1/2 in. dia; upper rim 4-1/4 in. dia; 1-3/4 in. high; 6-1/4 in. dia mtg holes on lower rim; Rotron Model EG, Part No. 4125; Sperry drwg. 4223-09674	Support for V1 through V12
Z1	VOLTAGE REGULATOR: 3-phase; forced air-cooled; automatic type 112°F (50°C) ambient operating temp ±60% regulation range; 208 volt, 3-phase 60 cps input; 15 seconds max from lower to upper limit; 154 KVA pwr input, 110 KVA pwr output; 2% regulation accuracy; G. E. Inductrol Regulator AIRT-60-44-208-216-AB; Control Panel CS31D4280G2; Regulator CS31D4314G1; Richardson-Allen Part No. 75031; Sperry drwg. 4223-09642	Regulates primary voltage T1 (figure 6-6)
	CONSISTING OF BELOW LISTED ITEMS:	
Z1B1	MOTOR ASSEMBLY: including worm gear G. E. Catalog No. 696A94G1	Drive motor
Z1B2	MOTOR, FAN: G. E. Catalog No. 495B491ABG7	Replacement motor for cooler fan
Z1C1	CAPACITOR: G. E. Catalog No. 23F879	Motor starting capacitor
Z1C2	Same as Z1C1	
Z1CB1	CIRCUIT BREAKER: G. E. Catalog No. W13ECP400	Operate motor protection
Z1CB2	CIRCUIT BREAKER: G. E. Catalog No. W13ECP404	Blower motor protection
Z1K1	RELAY, REGULATING: G. E. Catalog No. 31D4121G1	Voltage regulator relay
Z1K1A	CONTACTS: consisting of Movable Contacts; G. E. Catalog No. 3994948G4 (2 each); Stationary Contacts; G. E. Catalog No. 3994949G1 (2 each)	Replacement contacts for regulating relay

TABLE 7-1 POWER SUPPLY PP-2540/FPN-42, MAINTENANCE PARTS LIST (Cont)

REF DESIGNATION	DESCRIPTION	FUNCTION
Z1K1B	BEAM ASSEMBLY: G. E. Catalog No. 129A377G2	Replacement for regulating relay
Z1K2	RELAY, MOTOR CONTROL: G. E. Catalog No. 31D4254G1	Motor control relay
Z1K2A	CONTACT SET: consisting of movable contact assembly (right hand); G. E. Catalog No. 5276615G4 (1 each); movable contact assembly (left hand); G. E. Catalog No. 5276615G3 (1 each); Stationary contacts; G. E. Catalog No. 5276613G1 (2 each)	Replacement contacts for motor control relay
Z1K3	RELAY: G. E. Catalog No. W8RP101	Undervoltage relay
Z1MP1	SPUR GEAR: G. E. Catalog No. 326A625P52	Spur gear for rotor
Z1R1	RESISTOR, FIXED, TAPPED: G. E. Catalog No. 165V612P21	Holding effect
Z1R2	RHEOSTAT: G. E. Catalog No. W8RFP017	Ballast
Z1R3	RESISTOR ASSEMBLY: G. E. Catalog No. 678A230G15	Ballast
Z1S1	SWITCH: G. E. Catalog No. W8XEP391	Lower limit switch
Z1S2	Same as Z1S1	Upper limit switch
Z1S3	SWITCH: G. E. Catalog No. W8XEP321	Control power switch
Z1S4	Same as Z1S3	Motor power switch
Z1S5	SWITCH: G. E. Catalog No. W8XEP358	Control selector switch
Z1S6	Same as Z1S1	Limit switch
Z1T1	TRANSFORMER: G. E. Catalog No. 31D4314G1	Regulator
Z1T2	TRANSFORMER: G. E. Catalog No. W8YEP093	
Z1T3	Same as Z1T2	
Z1T4	TRANSFORMER: G. E. Catalog No. W8YEP012	

TABLE 7-1. POWER SUPPLY PP-2540/FPN-42, MAINTENANCE PARTS LIST (Cont)

REF DESIGNATION	DESCRIPTION	FUNCTION
Z2	VOLTAGE REGULATOR: 3 phase; air cooled; automatic type; 112°F (50°C) ambient operating temp; ±11.1% regulation range; 208 volt 3-phase, 60 cps input, 22.2 KVA pwr input, 20 KVA pwr output ±2% regulation accuracy; G. E. Inductrol Regulator AIRT-60-2.22-208-55.6; Control Panel CS31D3509G8; Regulator CS31D4315G1; Richardson-Allen Part No. 75032; Sperry drwg. 4223-09629	Regulates primary voltage of T2, T3, T7, and T8 (figure 6-9)
	CONSISTING OF BELOW LISTED ITEMS:	
Z2B1	MOTOR ASSEMBLY: including worm gear; G. E. Catalog No. 682A891G2	Drive motor
Z2C1	CAPACITOR: G. E. Catalog No. 49F129	Starting capacitor
Z2F1	FUSE, CARTRIDGE: 2 amp, 250 V; MIL-F-15160C Type F09G2R00A; G. E. Catalog No. W8DDP451	
Z2F2	Same as Z2F1	
Z2F3	FUSE, CARTRIDGE: 1 amp, 250 V; MIL-F-15160C Type F09G1R00A; G. E. Catalog No. W8DDP450	
Z2K1	RELAY, REGULATING: G. E. Catalog No. 31D2680G5	
Z2K1A	Same as Z1K1A	
Z2K2	RELAY, MOTOR CONTROL: G. E. Catalog No. 31D951G1	
Z2K2A	Same as Z1K2A	
Z2MP1	SPUR GEAR: G. E. Catalog No. 668A759P22	Spur gear for rotor
Z2R1	RESISTOR, FIXED, TAPPED: G. E. Catalog No. 165V692P21	Holding coil for rheostat
Z2R2	Same as Z2R1	
Z2S1	SWITCH: sensitive, with actuator, Micro Switch Type V3-19; G. E. Catalog No. 685A480G1	
Z2S2	SWITCH: sensitive, with actuator, Micro Switch Type JV-5	
Z2S3	SWITCH: DPST, 6A250V, 12A1252; bat handle; G. E. Catalog No. W8XEP321	Control switch

TABLE 7-1. POWER SUPPLY PP-2540/FPN-42, MAINTENANCE PARTS LIST (Cont)

REF DESIGNATION	DESCRIPTION	FUNCTION
Z2S4	Same as Z2S3	
Z2S5	SWITCH: SPST, 3A250V, 6A125V, bat handle; G. E. Catalog No. W8XEP350	Control switch
Z2T1	TRANSFORMER: G. E. Catalog No. 31D4315G1	Regulator
Z2T2	TRANSFORMER: G. E. Catalog No. W8YEP093	
Z2T3	TRANSFORMER: G. E. Catalog No. 31D2063G1	Isolating transformer

TABLE 7-2. POWER SUPPLY PP-2540/FPN-42, LIST OF MANUFACTURERS

ABBREVIATION	NAME	ADDRESS
A&M Instruments	A and M Instruments, Inc.	Astoria, N. Y.
Agastat	Agastat Division of Elastic Stop Nut Corp. of America	1027 Newark Ave. Elizabeth, N. J.
Air-Maze	Air-Maze Corporation	Cleveland, Ohio
Allen-Bradley	Allen-Bradley Company	136 W. Greenfield Ave. Milwaukee, Wis.
Amer Std	American Standard Products Co.	Hartford, Conn.
Beede	Beede Electrical Instrument Co., Inc.	Penacook, New Hampshire
Birnbach	Birnbach Radio Company	New York, N. Y.
Bussman	Bussman Mfg. Division, McGraw-Edison Co.	University at Jefferson St. Louis, Mo.
Chase-Shawmut	Chase-Shawmut Co.	398 Merrimac St. Newburyport, Mass.
Cinch-Jones	Cinch Manufacturing Co. Division of United-Carr Fastener Corp.	Chicago, Illinois
Cramer	Cramer Controls Corp.	35 Liberty Road Bergenfield, N. J.
Cutler-Hammer	Cutler-Hammer, Inc.	315 N. 12th St. Milwaukee, Wis.
Dialco	Dial Light Corp.	60 Stewart Ave. Brooklyn, N. Y.

TABLE 7-2. POWER SUPPLY PP-2540/FPN-42, LIST OF MANUFACTURERS (Cont)

ABBREVIATION	NAME	ADDRESS
H. G. Dietz	The Henry G. Dietz Co.	12-16 Astoria Blvd. L. I. C., N. Y.
Eimac	Eitel-McCullough, Inc.	San Carlos, Calif.
Etco	Electronic Transformer Co., Inc.	70 Washington Avenue Brooklyn, N. Y.
Ferranti	Ferranti Electric, Inc.	95 Madison Ave. Hempstead, N. Y.
Freed	Freed Transformer Co., Inc.	1273 Weirfield St. Brooklyn, N. Y.
General Electric	General Electric Co.	Pittsfield, Mass.
ITE Circuit Breaker	ITE Circuit Breaker Co.	Philadelphia, Pa.
JBT	JBT Instruments, Inc.	133 Hamilton St. New Haven, Conn.
Light Electric Co.	Light Electric Corporation	Newark, N. J.
Magnatran	Magnatran, Inc.	Kearny, N. J.
Manson Labs	Manson Laboratories	Stamford, Conn.
Micro Switch	Micro Switch Div. of Minneapolis-Honeywell Regulator Co.	Freeport, Illinois
Peerless	Peerless Electric Co.	433 Chanin Bldg. New York 17, N. Y.
Reynolds	Reynolds Electric Co.	30-46 River Road River Grove, Ill.
Rotron	Rotron Manufacturing Co., Inc.	Woodstock, N. Y.
Sperry	Sperry Gyroscope Division of Sperry-Rand Corp.	Great Neck, L.I., N. Y.
Sperti Faraday	Sperti Faraday, Inc.	Adrian, Mich.
Staco	Standard Electrical Products Co.	Dayton, Ohio
Struthers-Dunn	Struthers-Dunn, Inc.	Pitman, N. J.
Superior Electric Co.	Superior Electric Co.	385 Laurel St. Bristol, Conn.
Transformers, Inc.	Transformers, Inc.	Vestal, N. Y.
Westinghouse	Westinghouse Electric Corp. Semi-Conductor Department	Youngwood, Pa.